hammond POWER SOLUTIONS

595 Southgate Drive
Guelph ON, N1G 3W6

HPS Titan™ X

Dry Type Encapsulated Transformer
Transformateur de Type Sec Encapsulé

Part No. TX2A0030KBKF

CE II 3G
DEMKO 21 ATEX 2235X
IECEx UL 21.0116X
Ex ec IIC T3 Gc

Cust. Ref. / Ref. du Client		Serial No. / No. de Serie	
Phase	3	HV/HT	480V 36.1A
Type	—	BIL	10 kV
Cooling / Refroidissement	AN	Term / Bornes	H1 H2 H3
kVA	30	LV/BT	208Y/120V 83.3A
Temp. Rise / Echauffement	115 °C	BIL	10 kV
Temp Class / Classe Temp	180 °C	Term / Bornes	X0 X1 X2 X3
Winding / Enroulement	CU		−25° C<=Tamb<=+40° C
Frequency / Frequence Hz	60		
Impedance % @ 135 °C	2		
Encl Type / Type De Coffrage	IP66		
Weight / Poids lbs/kg	462/210		

Made in Mexico

VOLTS	CURRENT COURANT	% RATED VOLTAGE % TENSION NOMINALE	CONNECTION EACH PHASE CONNEXION PAR PHASE
504	34.4	105	1
492	35.2	102.5	2
480	36.1	100	3
468	37.0	97.5	4
456	38.0	95	5
444	39.0	92.5	6
432	40.1	90	7

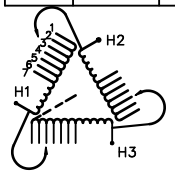

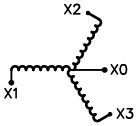

HAZARDOUS LOCATIONS CLASS 1, ZONE 2
GROUP IIC, T3

ELECTROSTATIC SHIELD

WARNING/ATTENTION:
- EXPLOSION HAZARD. DO NOT DISCONNECT EQUIPMENT WHILE THE CIRCUIT IS LIVE OR UNLESS THE AREA IS FREE OF IGNITABLE CONCENTRATIONS.
- POTENTIAL ELECTROSTATIC CHARGING HAZARD. REFER THE INSTALLATION MANUAL.
- RISQUE DêEXPLOSION. NE PAS DÉBRANCHER PENDANT QUE LE CIRCUIT EST SOUS TENSION OU À MOINS QUE LêEMPLACEMENT NE SOIT EXEMPT DE CONCENTRATIONS INFLAMMABLES.
- DANGER POTENTIEL DE CHARGE ÉLECTROSTATIQUE SE RÉFÉRER AU MANUEL D'INSTALLATION

SEISMIC QUALIFICATIONS:
OSP−0136/IBC 2018/ASCE 7−16
SDS<=2.0g Z/h=1 Ip=1.5

d0002o3a

hammond POWER SOLUTIONS

NO.	DATE	BY	REVISION

TITLE: 3PH DISTRIBUTION TRANSFORMER
NAMEPLATE INFORMATION

DES: PPICASSI
DATE: 24/02/28
SCALE: NTS

SHEET 1 OF 2

EDB TX2A0030KBKF

0.1 httpd 2026/04/01 10:36

THIS DRAWING CONTAINS STRICKLY CONFIDENTIAL INFORMATION BELONGING TO HAMMOND POWER SOLUTIONS AND MUST NOT BE DISTRIBUTED OUTSIDE AUTHORIZED PARTIES.

FRONT VIEW

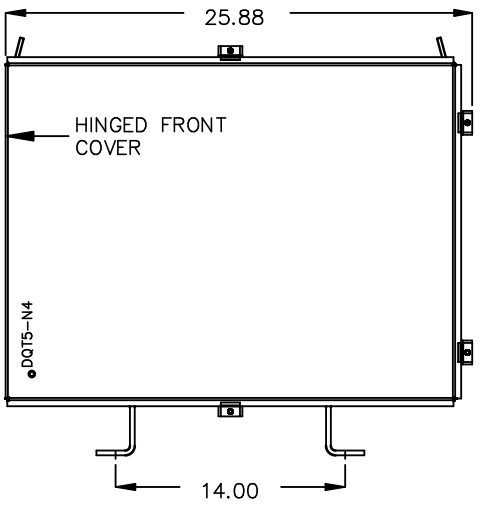

SIDE VIEW

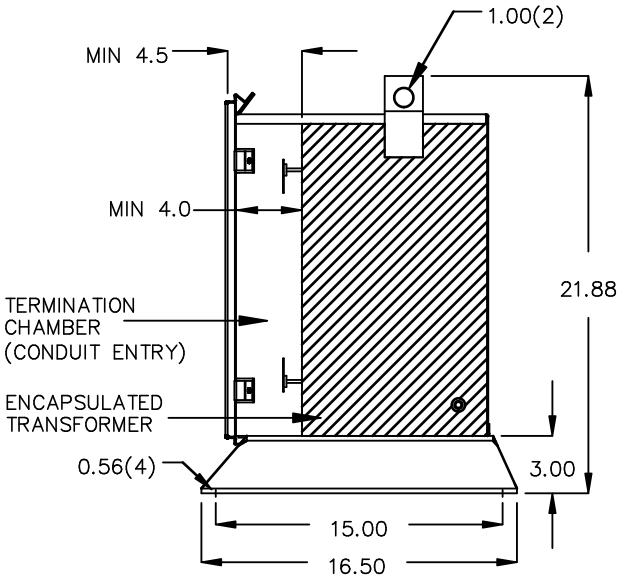

All Dimensions in inches

ENCLOSURE COLOR : ANSI 61 GREY – OUTDOOR

HV TERMINAL DETAIL

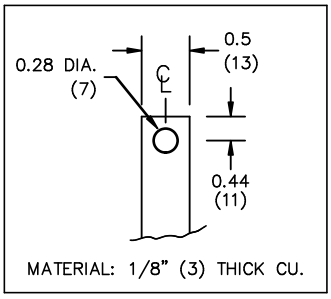

LV TERMINAL DETAIL

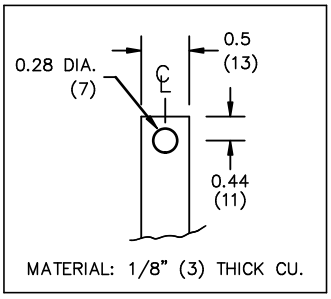

CUSTOMER NOTES:
- HV TERMINATED AT BOTTOM FRONT
- LV TERMINATED AT TOP FRONT

THIS DRAWING CONTAINS STRICKLY CONFIDENTIAL INFORMATION BELONGING TO HAMMOND POWER SOLUTIONS AND MUST NOT BE DISTRIBUTED OUTSIDE AUTHORIZED PARTIES.

hammond POWER SOLUTIONS

TITLE: 3PH DISTRIBUTION TRANSFORMER

NO.	DATE	BY	REVISION

DES: PPICASSI
DATE: 24/02/28
SCALE: NTS

SHEET 2 OF 2

EDB TX2A0030KBKF

0.1 httpd 2026/04/01 10:36