HPS Titan™ N

Dry Type Encapsulated Transformer
Transformateur de Type Sec Encapsulé

Hammond Power Solutions
Guelph, ONT
Compton, CA
Baraboo, WI
Monterrey, MX

Part No. TN2A0075PBKF

C UL US LISTED
31GW E258346
GENERAL PURPOSE
TRANSFORMER FOR USE IN
HAZARDOUS LOCATIONS

8 03423 15132 4

ABS PDA CERTIFICATE
19-HS1854283-PDA

Cust. Ref. / Ref. du Client		Serial No. / No. de Serie	
Phase	3	HV/HT	600V 72.2A
Type	HZQT	BIL	10 kV
Cooling / Refroidissement	ANC	Term / Bornes	H1 H2 H3
kVA	75	LV/BT	208Y/120V 208A
Temp. Rise / Echauffement	115 °C	BIL	10 kV
Temp Class / Classe Temp	180 °C	Term / Bornes	X0 X1 X2 X3
Winding / Enroulement	CU		
Frequency / Frequence Hz	60		
Impedance % @ 135 °C	2		
Encl Type / Type De Coffrage	4		
Weight / Poids lbs/kg	1100/499		

VOLTS	CURRENT COURANT	% RATED VOLTAGE % TENSION NOMINALE	CONNECTION EACH PHASE CONNEXION PAR PHASE
630	68.7	105	1
615	70.4	102.5	2
600	72.2	100	3
585	74.0	97.5	4
570	76.0	95	5
555	78.0	92.5	6
540	80.2	90	7

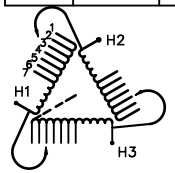

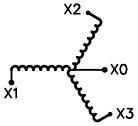

HAZARDOUS LOCATIONS CLASS 1, DIV 2
GROUPS A, B, C & D
TEMPERATURE CODE: T3A

HAZARDOUS LOCATIONS CLASS 1, ZONE 2
GROUPS IIC, T3

SPACINGS BETWEEN ANY VENTILATED ENCLOSURE PANEL AND ANY ADJACENT WALL SHALL BE A MINIMUM OF 3 INCHES

ELECTROSTATIC SHIELD

WARNING – EXPLOSION HAZARD. DO NOT DISCONNECT EQUIPMENT WHILE THE CIRCUIT IS LIVE OR UNLESS THE AREA IS FREE OF IGNITABLE CONCENTRATIONS.

AVERTISSEMENT : RISQUE DëEXPLOSION. NE PAS DÉBRANCHER PENDANT QUE LE CIRCUIT EST SOUS TENSION OU À MOINS QUE LëEMPLACEMENT NE SOIT EXEMPT DE CONCENTRATIONS INFLAMMABLES.

SEISMIC QUALIFICATIONS:
OSP-0136-10/IBC 2018/ASCE 7-16
SDS<=2.0g Z/h=1 Ip=1.5

d0002006a

Hammond Power Solutions Inc.

TITLE: 3PH DISTRIBUTION TRANSFORMER
NAMEPLATE INFORMATION

NO.	DATE	BY	REVISION
2	21/07/16	PP	EDB UPDATE
1	20/03/17	PP	SEISMIC UPDATE

SCALE: NTS
DATE: 19/02/14
DES: PPICASSI

SHEET 1 OF 2

EDB TN2A0075PBKF

2.0 jwen 2021/07/16 14:47

FRONT VIEW

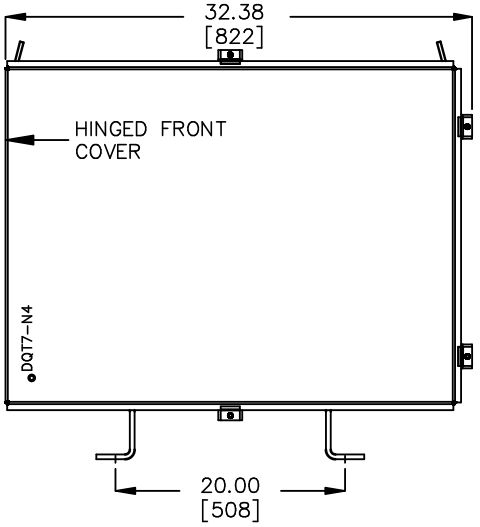

SIDE VIEW

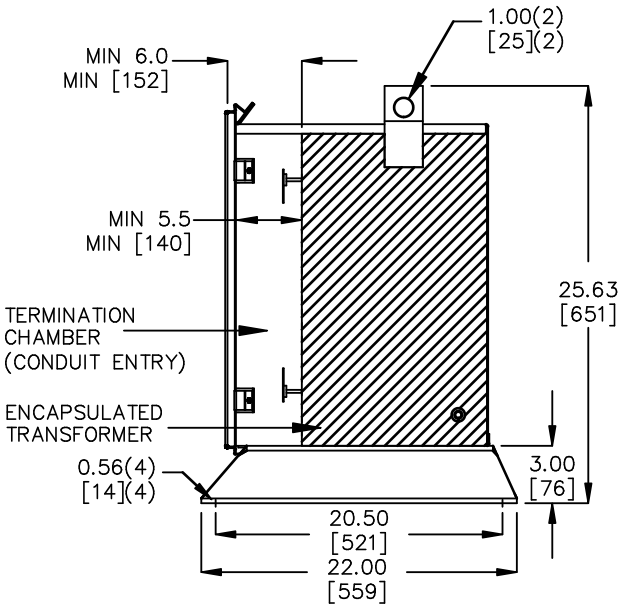

All Dimensions in inches[mm]

ENCLOSURE COLOR : ANSI 61 GREY – OUTDOOR

HV TERMINAL DETAIL

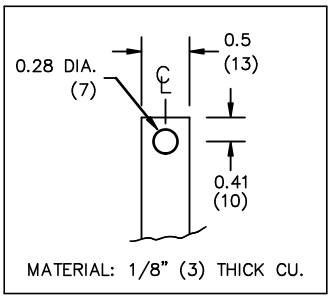

MATERIAL: 1/8" (3) THICK CU.

LV TERMINAL DETAIL

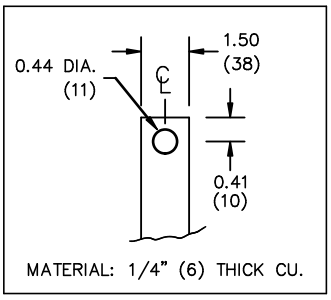

MATERIAL: 1/4" (6) THICK CU.

CUSTOMER NOTES:
- HV TERMINATED AT BOTTOM FRONT
- LV TERMINATED AT TOP FRONT

Hammond Power Solutions Inc.

TITLE: 3PH DISTRIBUTION TRANSFORMER

NO.	DATE	BY	REVISION	
2	21/07/16	PP	EDB UPDATE	DES: PPICASSI
1	20/03/17	PP	SEISMIC UPDATE	DATE: 19/02/14
				SCALE: NTS

SHEET 2 OF 2

EDB TN2A0075PBKF

2.0 jwen 2021/07/16 14:47