hammond POWER SOLUTIONS

HPS Tribune™ E

Energy Efficient Drive Isolation Transformer

Transformateur Pour Variateur de Vitesse à Efficacité Énergétique

Guelph, ONT
Compton, CA

Baraboo, WI
Monterrey, MX

Part No. TE3A0660NJ

LR 3902

DRY TYPE TRANSFORMER
77U5
E112313
LISTED

8 03423 14423 4

ALSO VERIFIED IN ACCORDANCE TO ENERGY STANDARD C802.2-18 BY UNDERWRITERS LABORATORIES INC. 3VJ6

Cust. Ref. / Ref. du Client		Serial No. / No. de Serie	
Phase	3	HV/HT	575V 663A
Type	K	BIL	10 kV
Cooling / Refroidissement	ANN	Term Bornes	H1 H2 H3
kVA	660	LV/BT	460Y/266V 828A
Temp. Rise / Echauffement	150 °C	BIL	10 kV
Temp Class / Classe Temp	220 °C	Term Bornes	X0 X1 X2 X3
Winding / Enroulement	AL	Energy Regulations	DOE 10 CFR PART 431:2016
Frequency / Frequence Hz	60	Reglements de Energetique	CEE ACT SOR/2018-201
Impedance % @ 170 °C	6.4		
Encl Type / Type De Coffrage	3R		
Weight / Poids lbs/kg	3950/1792		

VOLTS	CURRENT COURANT	% RATED VOLTAGE % TENSION NOMINALE	CONNECTION EACH PHASE CONNEXION PAR PHASE
604	631	105	1-2
589	647	102.5	2-3
575	663	100	3-4
561	680	97.5	4-5
546	698	95	5-6

SPACINGS BETWEEN ANY VENTILATED ENCLOSURE PANEL AND ANY ADJACENT WALL SHALL BE A MINIMUM OF 12 INCHES
ELECTROSTATIC SHIELD

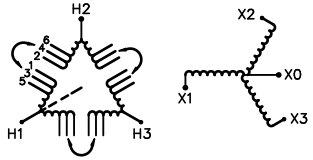

SEISMIC QUALIFICATIONS:
AS FLOOR MOUNT ONLY
IBC 2018/ASCE 7-16
SDS<=2.0g Z/h=0 Ip=1.5

d0019494

hammond POWER SOLUTIONS

TITLE: 3PH DISTRIBUTION TRANSFORMER NAMEPLATE INFORMATION

NO.	DATE	BY	REVISION

DES: RMOVVA
DATE: 25/05/01
SCALE: NTS

SHEET 1 OF 3

EDBTE3A0660NJ

0.1 httpd 2026/07/22 14:55

THIS DRAWING CONTAINS STRICTLY CONFIDENTIAL INFORMATION BELONGING TO HAMMOND POWER SOLUTIONS AND MUST NOT BE DISTRIBUTED OUTSIDE AUTHORIZED PARTIES.

FRONT VIEW

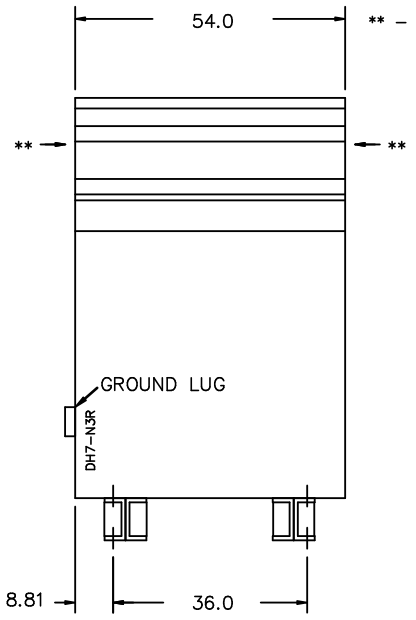

** – Recommended cable entry locations only
cutouts & gland plates not provided.

SIDE VIEW

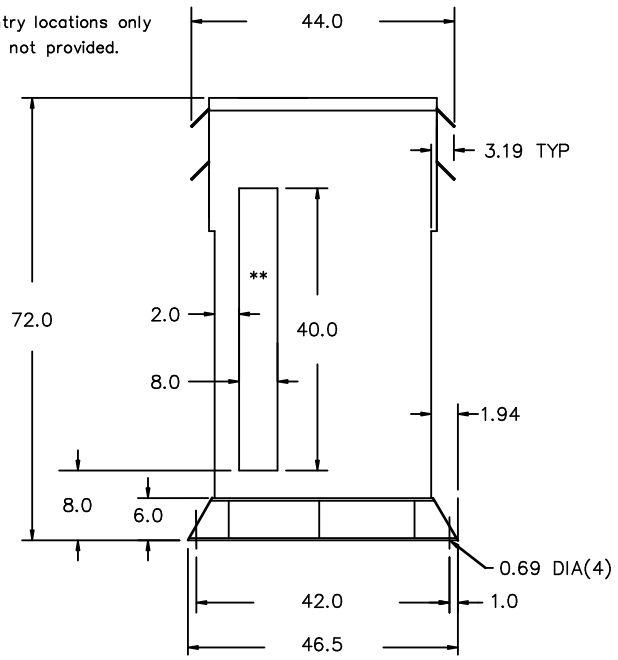

All Dimensions in inches

ENCLOSURE COLOR : ANSI 61 GREY – OUTDOOR

HV TERMINAL DETAIL

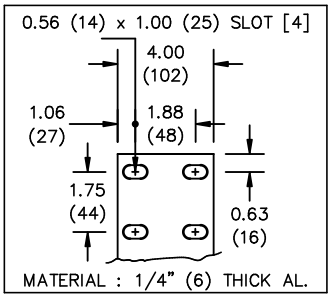

LV TERMINAL DETAIL

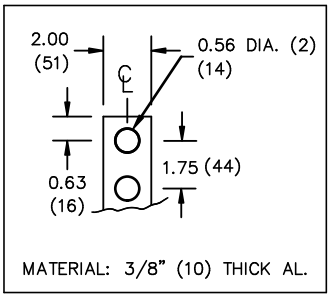

CUSTOMER NOTES:
- HV TERMINATED AT TOP FRONT
- LV TERMINATED AT BOTTOM FRONT
- C/W 1–"NC"– THERMOSTAT PER COIL CONNECTED TO T.B.

THIS DRAWING CONTAINS STRICTLY CONFIDENTIAL INFORMATION BELONGING TO HAMMOND POWER SOLUTIONS AND MUST NOT BE DISTRIBUTED OUTSIDE AUTHORIZED PARTIES.

hammond POWER SOLUTIONS

TITLE: 3PH DISTRIBUTION TRANSFORMER

NO.	DATE	BY	REVISION

DES: RMOVVA
DATE: 25/05/01
SCALE: NTS

SHEET 2 OF 3

EDB TE3A0660NJ

0.1 httpd 2026/07/22 14:55

ENCLOSURE BOTTOM VIEW

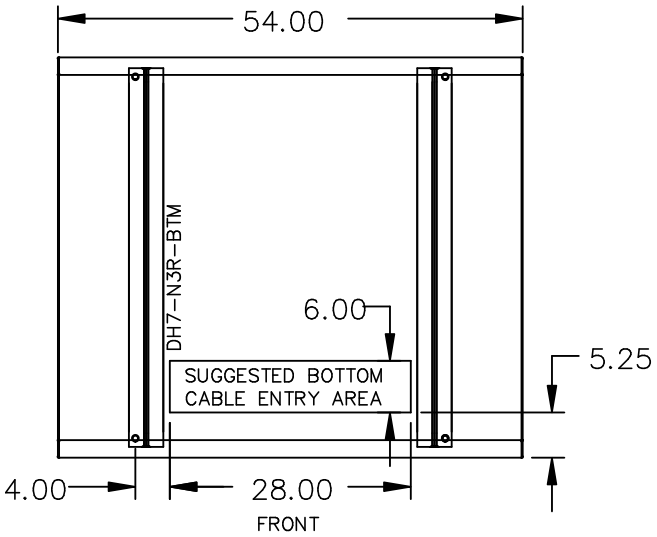

NOTE:
WHEN BOTTOM CABLE ENTRY IS OPTED, THE SPACE USED FOR CONDUITS IN THE FRONT OF THE TRANSFORMER SHOULD NOT OBSTRUCT MORE THAN 50% OF THE FRONT AIR INTAKE AREA DEFINED BETWEEN THE BOTTOM PLATE AND THE SUPPORTING LEGS.
SEE MANUAL FOR ADDITIONAL INFORMATION

THIS DRAWING CONTAINS STRICTLY CONFIDENTIAL INFORMATION BELONGING TO HAMMOND POWER SOLUTIONS AND MUST NOT BE DISTRIBUTED OUTSIDE AUTHORIZED PARTIES.

hammond POWER SOLUTIONS

TITLE: 3PH DISTRIBUTION TRANSFORMER ENCLOSURE BOTTOM VIEW

NO.	DATE	BY	REVISION

DES: RMOVVA
DATE: 25/05/01
SCALE: NTS

SHEET 3 OF 3

EDB TE3A0660NJ

0.1 hitpd 2026/07/22 14:55