HPS Tribune ®E

Energy Efficient Drive Isolation Transformer

Transformateur Pour Variateur de Vitesse à Efficacité Énergétique

Hammond Power Solutions

Guelph, ONT
Compton, CA

Baraboo, WI
Monterrey, MX

Part No. TE3A0075NJM

LR 3902

DRY TYPE TRANSFORMER 77U5 E112313 LISTED

8 03423 14532 3

ALSO VERIFIED IN ACCORDANCE TO ENERGY STANDARD C802.2-12

Cust. Ref. / Ref. du Client		Serial No. / No. de Serie	
Phase	3	HV/HT	575V 75.3A
Type	K	BIL	10 kV
Cooling / Refroidissement	ANN	Term / Bornes	H1 H2 H3
kVA	75	LV/BT	460Y/266V 94.1A
Temp. Rise / Echauffement	150 °C	BIL	10 kV
Temp Class / Classe Temp	220 °C	Term / Bornes	X0 X1 X2 X3
Winding / Enroulement	CU	Energy Regulations	DOE 10 CFR PART 431:2016
Frequency / Frequence Hz	60	Reglements de Energetique	CEE ACT SOR/2018-201
Impedance % @ 170 °C	4.6		
Encl Type / Type De Coffrage	3R		
Wt LBS / Poids en lbs	570		

VOLTS	CURRENT COURANT	% RATED VOLTAGE % TENSION NOMINALE	CONNECTION EACH PHASE CONNEXION PAR PHASE
604	71.7	105	1
589	73.5	102.5	2
575	75.3	100	3
561	77.2	97.5	4
546	79.3	95	5

SPACINGS BETWEEN ANY VENTILATED ENCLOSURE PANEL AND ANY ADJACENT WALL SHALL BE A MINIMUM OF 3 INCHES
ELECTROSTATIC SHIELD

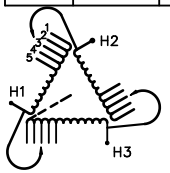

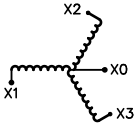

SEISMIC QUALIFICATIONS:
AS FLOOR MOUNT ONLY
IBC 2018/ASCE 7-16
SDS<=2.0g Z/h=1 Ip=1.5

d0001944b

Hammond Power Solutions Inc.

TITLE: 3PH DISTRIBUTION TRANSFORMER NAMEPLATE INFORMATION

NO.	DATE	BY	REVISION
1	20/03/17	PP	SEISMIC UPDATE

DES: PPICASSI
DATE: 18/03/07
SCALE: NTS

SHEET 1 OF 3

EDB TE3A0075NJM

1.0 jwen 2020/03/17 11:47

FRONT VIEW

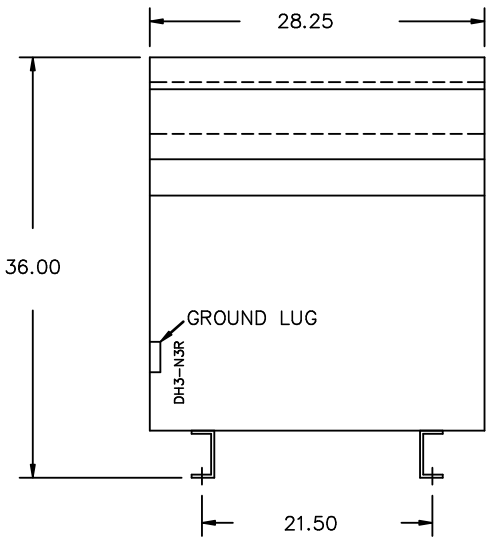

SIDE VIEW

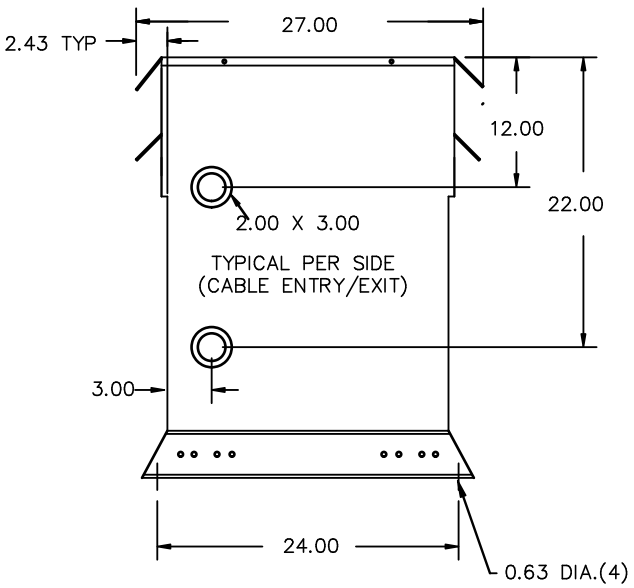

All Dimensions in inches

ENCLOSURE COLOR :ANSI 61 GREY – OUTDOOR

HV TERMINAL DETAIL

MECHANICAL TYPE LUGS INCLUDED
SUITABLE FOR #2/0–14 CU/AL
CONDUCTORS
1 CONDUCTOR PER PHASE

LV TERMINAL DETAIL

MECHANICAL TYPE LUGS INCLUDED
SUITABLE FOR #2/0–14 CU/AL
CONDUCTORS
1 CONDUCTOR PER PHASE

CUSTOMER NOTES:

- HV TERMINATED AT TOP FRONT
- LV TERMINATED AT BOTTOM FRONT
- C/W 1–"NC"– THERMOSTAT PER COIL CONNECTED TO T.B.

Hammond Power Solutions Inc.

TITLE: 3PH DISTRIBUTION TRANSFORMER

NO.	DATE	BY	REVISION
1	20/03/17	PP	SEISMIC UPDATE

DES: PPICASSI
DATE: 18/03/07
SCALE: NTS

SHEET 2 OF 3

EDB TE3A0075NJM

1.0 jwen 2020/03/17 11:47

ENCLOSURE BOTTOM VIEW

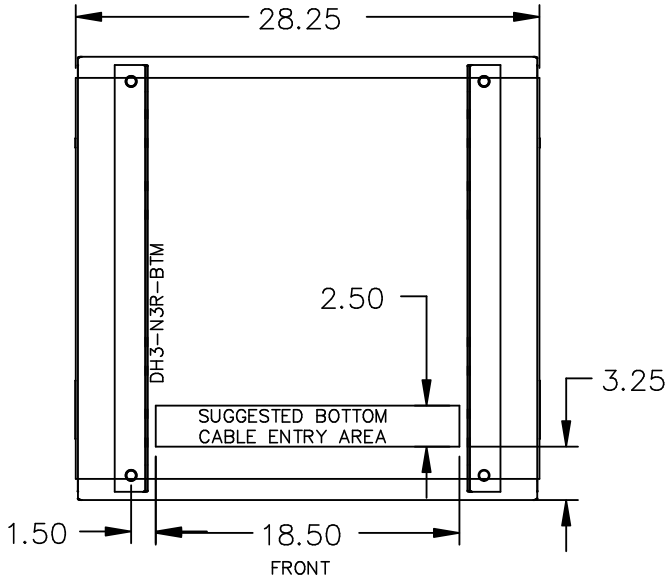

NOTE:
WHEN BOTTOM CABLE ENTRY IS OPTED, THE SPACE USED FOR CONDUITS IN THE FRONT OF THE TRANSFORMER SHOULD NOT OBSTRUCT MORE THAN 50% OF THE FRONT AIR INTAKE AREA DEFINED BETWEEN THE BOTTOM PLATE AND THE SUPPORTING LEGS.
SEE MANUAL FOR ADDITIONAL INFORMATION

Hammond Power Solutions Inc.

TITLE: 3PH DISTRIBUTION TRANSFORMER ENCLOSURE BOTTOM VIEW

NO.	DATE	BY	REVISION
1	20/03/17	PP	SEISMIC UPDATE

DES: PPICASSI
DATE: 18/03/07
SCALE: NTS

SHEET 3 OF 3

EDB TE3A0075NJM

1.0 jwen 2020/03/17 11:47