hammond POWER SOLUTIONS

HPS Tribune™ E

Energy Efficient Drive Isolation Transformer

Transformateur Pour Variateur de Vitesse à Efficacité Énergétique

Guelph, ONT
Compton, CA

Baraboo, WI
Monterrey, MX

Part No. TE3A0075JC

LR 3902

DRY TYPE TRANSFORMER
77U5
E112313
LISTED

8 03423 14328 2

ALSO VERIFIED IN ACCORDANCE TO ENERGY STANDARD C802.2-18 BY UNDERWRITERS LABORATORIES INC.® 3VJ6

Cust. Ref. / Ref. du Client		Serial No. / No. de Serie	
Phase	3	HV/HT	460V 94.1A
Type	K	BIL	10 kV
Cooling / Refroidissement	ANN	Term / Bornes	H1 H2 H3
kVA	75	LV/BT	230Y/133V 188A
Temp. Rise / Echauffement	150 °C	BIL	10 kV
Temp Class / Classe Temp	220 °C	Term / Bornes	X0 X1 X2 X3
Winding / Enroulement	AL	Energy Regulations	DOE 10 CFR PART 431:2016
Frequency / Frequence Hz	60	Reglements de Energetique	CEE ACT SOR/2018-201
Impedance % @ 170 °C	4.6		
Encl Type / Type De Coffrage	3R		
Weight / Poids lbs	590		

VOLTS	CURRENT COURANT	% RATED VOLTAGE % TENSION NOMINALE	CONNECTION EACH PHASE CONNEXION PAR PHASE
483	89.7	105	1
472	91.8	102.5	2
460	94.1	100	3
448	96.5	97.5	4
437	99.1	95	5

SPACINGS BETWEEN ANY VENTILATED ENCLOSURE PANEL AND ANY ADJACENT WALL SHALL BE A MINIMUM OF 3 INCHES
ELECTROSTATIC SHIELD

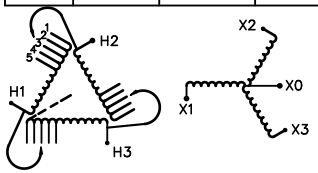

SEISMIC QUALIFICATIONS:
AS FLOOR MOUNT ONLY
IBC 2018/ASCE 7-16
SDS<=2.0g Z/h=0 Ip=1.5

d0019446

hammond POWER SOLUTIONS

TITLE: 3PH DISTRIBUTION TRANSFORMER NAMEPLATE INFORMATION

NO.	DATE	BY	REVISION

DES: PPICASSI
DATE: 18/06/05
SCALE: NTS

SHEET 1 OF 3

EDB TE3A0075JC

0.0 root 2025/08/26 16:10

FRONT VIEW

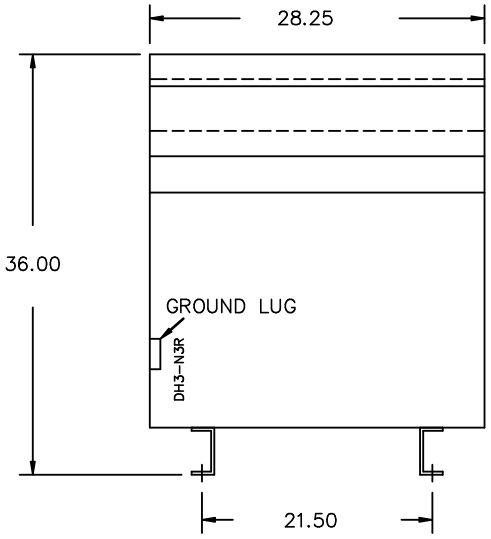

SIDE VIEW

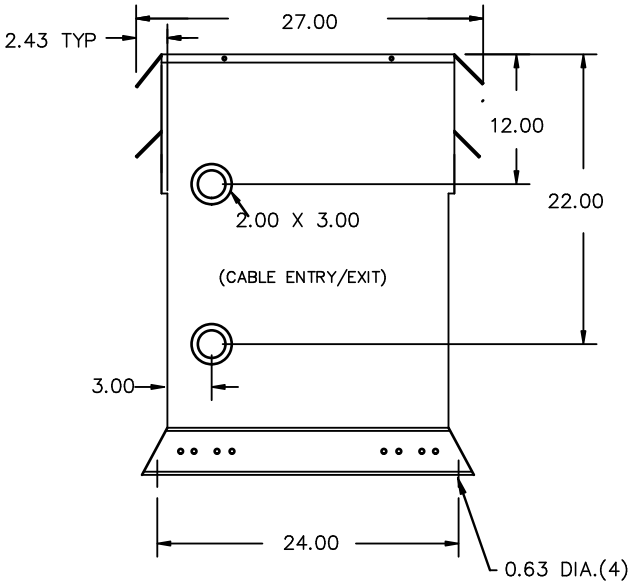

All Dimensions in inches

ENCLOSURE COLOR :ANSI 61 GREY – OUTDOOR

HV TERMINAL DETAIL

MECHANICAL TYPE LUGS INCLUDED
SUITABLE FOR #2/0–14 CU/AL
CONDUCTORS
1 CONDUCTOR PER PHASE

LV TERMINAL DETAIL

MECHANICAL TYPE LUGS INCLUDED
SUITABLE FOR 600MCM–2 CU/AL
CONDUCTORS
1 CONDUCTOR PER PHASE

CUSTOMER NOTES:

- HV TERMINATED AT TOP FRONT
- LV TERMINATED AT BOTTOM FRONT
- C/W 1–"NC"– THERMOSTAT PER COIL CONNECTED TO T.B.

hammond POWER SOLUTIONS

TITLE: 3PH DISTRIBUTION TRANSFORMER

NO.	DATE	BY	REVISION

DES: PPICASSI
DATE: 18/06/05
SCALE: NTS

SHEET 2 OF 3

EDB TE3A0075JC

0.0 root 2025/08/26 16:10

ENCLOSURE BOTTOM VIEW

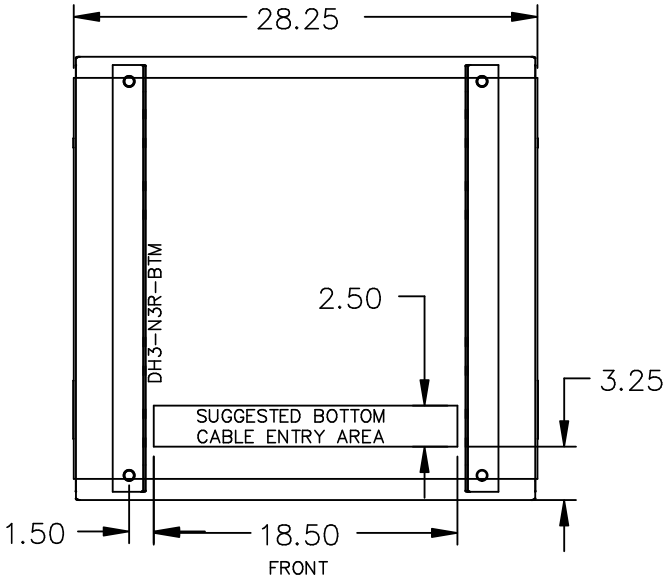

NOTE:
WHEN BOTTOM CABLE ENTRY IS OPTED, THE SPACE USED FOR CONDUITS IN THE FRONT OF THE TRANSFORMER SHOULD NOT OBSTRUCT MORE THAN 50% OF THE FRONT AIR INTAKE AREA DEFINED BETWEEN THE BOTTOM PLATE AND THE SUPPORTING LEGS.
SEE MANUAL FOR ADDITIONAL INFORMATION

hammond POWER SOLUTIONS

TITLE: 3PH DISTRIBUTION TRANSFORMER ENCLOSURE BOTTOM VIEW

NO.	DATE	BY	REVISION	
				DES: PPICASSI
				DATE: 18/06/05
				SCALE: NTS

SHEET 3 OF 3

EDB TE3A0075JC

0.0 root 2025/08/26 16:10