hammond POWER SOLUTIONS

HPS Tribune™ E

Energy Efficient Drive Isolation Transformer

Transformateur Pour Variateur de Vitesse à Efficacité Énergétique

Guelph, ONT
Compton, CA

Baraboo, WI
Monterrey, MX

Part No. TE3A0020NJ

LR 3902

DRY TYPE TRANSFORMER 77U5 E112313 LISTED

8 03423 14407 4

ALSO VERIFIED IN ACCORDANCE TO ENERGY STANDARD C802.2-18 BY UNDERWRITERS LABORATORIES INC. 3VJ6

Cust. Ref. / Ref. du Client		Serial No. / No. de Serie	
Phase	3	HV/HT	575V 20.1A
Type	K	BIL	10 kV
Cooling / Refroidissement	ANN	Term Bornes	H1 H2 H3
kVA	20	LV/BT	460Y/266V 25.1A
Temp. Rise / Echauffement	150 °C	BIL	10 kV
Temp Class / Classe Temp	220 °C	Term Bornes	X0 X1 X2 X3
Winding / Enroulement	AL	Energy Regulations	DOE 10 CFR PART 431:2016
Frequency / Frequence Hz	60	Reglements de Energetique	CEE ACT SOR/2018-201
Impedance % @ 170 °C	4.4		
Encl Type / Type De Coffrage	3R		
Weight / Poids lbs/kg	200/91		

VOLTS	CURRENT COURANT	% RATED VOLTAGE % TENSION NOMINALE	CONNECTION EACH PHASE CONNEXION PAR PHASE
604	19.1	105	1
589	19.6	102.5	2
575	20.1	100	3
561	20.6	97.5	4
546	21.1	95	5

SPACINGS BETWEEN ANY VENTILATED ENCLOSURE PANEL AND ANY ADJACENT WALL SHALL BE A MINIMUM OF 3 INCHES
ELECTROSTATIC SHIELD

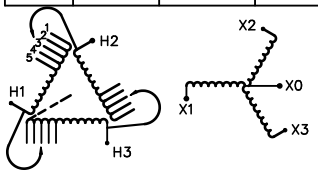

SEISMIC QUALIFICATIONS:
AS FLOOR MOUNT ONLY
IBC 2018/ASCE 7-16
SDS<=2.0g Z/h=0 Ip=1.5

d0001944b

hammond POWER SOLUTIONS

TITLE: 3PH DISTRIBUTION TRANSFORMER NAMEPLATE INFORMATION

NO.	DATE	BY	REVISION
2	25/09/29	AO	EDB UPDATE
1	20/03/17	PP	SEISMIC UPDATE

DES: CSHAH
DATE: 19/05/16
SCALE: NTS

SHEET 1 OF 3

EDBTE3A0020NJ

2.0 aopper 2025/09/29 15:38

THIS DRAWING CONTAINS STRICKLY CONFIDENTIAL INFORMATION BELONGING TO HAMMOND POWER SOLUTIONS AND MUST NOT BE DISTRIBUTED OUTSIDE AUTHORIZED PARTIES.

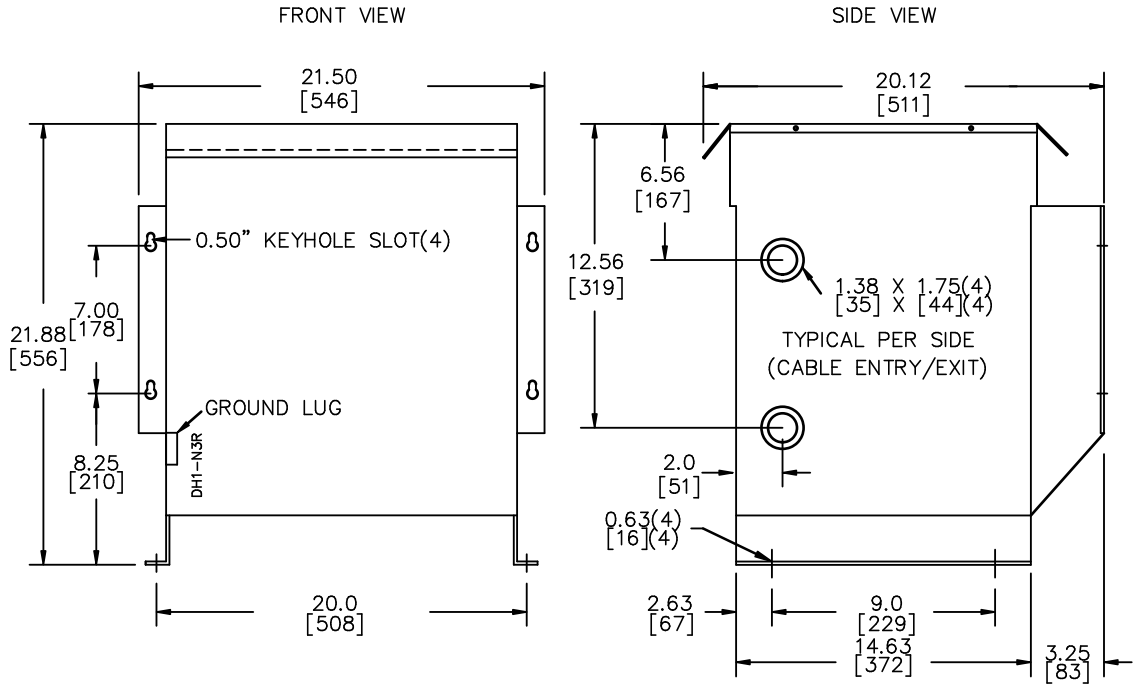

All Dimensions in inches[mm]

ENCLOSURE COLOR : ANSI-61 GREY PAINT OUTDOOR

HV TERMINAL DETAIL

MECHANICAL TYPE LUGS INCLUDED
SUITABLE FOR #14-2 CU/AL
CONDUCTORS
1 CONDUCTOR PER PHASE

LV TERMINAL DETAIL

MECHANICAL TYPE LUGS INCLUDED
SUITABLE FOR #14-2 CU/AL
CONDUCTORS
1 CONDUCTOR PER PHASE

CUSTOMER NOTES:

- HV TERMINATED AT TOP FRONT
- LV TERMINATED AT BOTTOM FRONT
- C/W 1-"NC"- THERMOSTAT PER COIL CONNECTED TO T.B.

hammond POWER SOLUTIONS

TITLE: 3PH DISTRIBUTION TRANSFORMER

NO.	DATE	BY	REVISION
2	25/09/29	AO	EDB UPDATE
1	20/03/17	PP	SEISMIC UPDATE

DES: CSHAH
DATE: 19/05/16
SCALE: NTS

SHEET 2 OF 3

EDB TE3A0020NJ

THIS DRAWING CONTAINS STRICKLY CONFIDENTIAL INFORMATION BELONGING TO HAMMOND POWER SOLUTIONS AND MUST NOT BE DISTRIBUTED OUTSIDE AUTHORIZED PARTIES.

ENCLOSURE BOTTOM VIEW

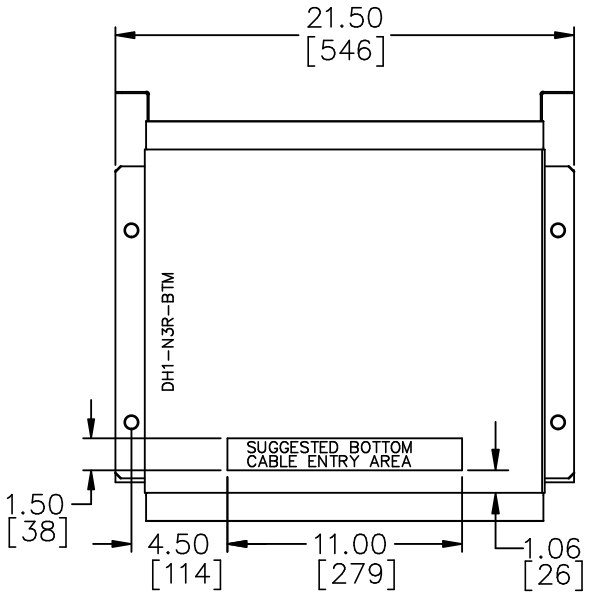

FRONT

NOTE:
WHEN BOTTOM CABLE ENTRY IS OPTED, THE SPACE USED FOR CONDUITS IN THE FRONT OF THE TRANSFORMER SHOULD NOT OBSTRUCT MORE THAN 50% OF THE FRONT AIR INTAKE AREA DEFINED BETWEEN THE BOTTOM PLATE AND THE SUPPORTING LEGS.
SEE MANUAL FOR ADDITIONAL INFORMATION

THIS DRAWING CONTAINS STRICKLY CONFIDENTIAL INFORMATION BELONGING TO HAMMOND POWER SOLUTIONS AND MUST NOT BE DISTRIBUTED OUTSIDE AUTHORIZED PARTIES.

hammond POWER SOLUTIONS

TITLE: 3PH DISTRIBUTION TRANSFORMER ENCLOSURE BOTTOM VIEW

NO.	DATE	BY	REVISION
2	25/09/29	AO	EDB UPDATE
1	20/03/17	PP	SEISMIC UPDATE

DES: CSHAH
DATE: 19/05/16
SCALE: NTS

SHEET 3 OF 3

EDB TE3A0020NJ

2.0 aopper 2025/09/29 15:38