HPS Sentinel™ K

Hammond Power Solutions

Energy Efficient Distribution Transformer

Transformateur de Distribution à Bon Rendement Énergétique

Guelph, ONT
Compton, CA

Baraboo, WI
Monterrey, MX

Part No. SK3A0500KK3K

LR 3902

DRY TYPE TRANSFORMER
77U5
E112313
LISTED

8 03423 13069 5

ALSO VERIFIED IN ACCORDANCE TO ENERGY STANDARD C802.2-18 BY UNDERWRITERS LABORATORIES INC. 3VJ6

Cust. Ref. / Ref. du Client		Serial No. / No. de Serie	
Phase	3	HV/HT	480V 601A
Type	K	BIL	10 kV
Cooling / Refroidissement	ANN	Term / Bornes	H1 H2 H3
kVA	500	LV/BT	480Y/277V 601A
Temp. Rise / Echauffement	150 °C	BIL	10 kV
Temp Class / Classe Temp	220°C	Term / Bornes	X0 X1 X2 X3
Winding / Enroulement	CU	Energy Regulations	DOE 10 CFR PART 431:2016
Frequency / Frequence Hz	60	Reglements de Energetique	CEE ACT SOR/2018-201
Impedance % @ 170 °C	4	Suitable for non-sinusoidal current load with K-factor not to exceed / Convient à des courants non-sinusoïdaux avec facteur K n'excédant pas	13
Encl Type / Type De Coffrage	3R		
Weight / Poids lbs/kg	3600/1633		

VOLTS	CURRENT COURANT	% RATED VOLTAGE % TENSION NOMINALE	CONNECTION EACH PHASE CONNEXION PAR PHASE
504	573	105	1-2
492	587	102.5	2-3
480	601	100	3-4
468	617	97.5	4-5
456	633	95	5-6
444	650	92.5	6-7
432	668	90	7-8

SPACINGS BETWEEN ANY VENTILATED ENCLOSURE PANEL AND ANY ADJACENT WALL SHALL BE A MINIMUM OF 12 INCHES
ELECTROSTATIC SHIELD

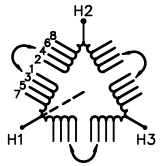

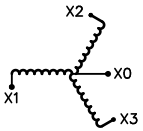

SEISMIC QUALIFICATIONS, AS FLOOR MOUNT ONLY
QUALIFICATIONS SISIQUES, COMME MONTAGE AU SOL SEULEMENT
IBC 2018/ASCE 7-16
SDS<=2.0g Z/h=0 Ip=1.5

d00018 7hb

Hammond Power Solutions Inc.

TITLE: 3PH DISTRIBUTION TRANSFORMER NAMEPLATE INFORMATION

NO.	DATE	BY	REVISION
2	21/07/16	PP	EDB UPDATE
1	20/03/17	PP	SEISMIC UPDATE

DES: RMOVVA
DATE: 19/11/08
SCALE: NTS

SHEET 1 OF 3

EDB SK3A0500KK3K

2.0 jwen 2021/07/16 14:27

FRONT VIEW

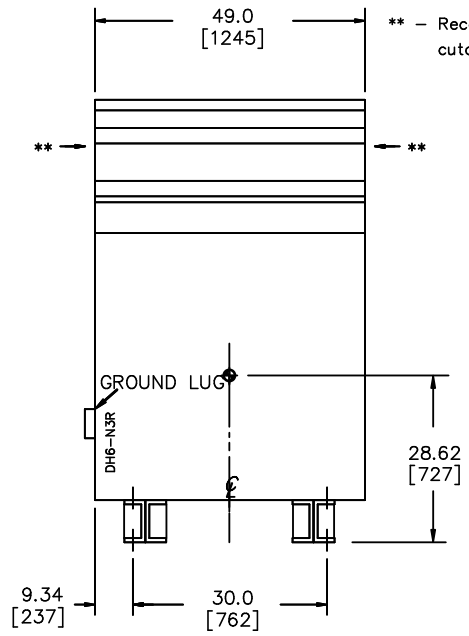

SIDE VIEW

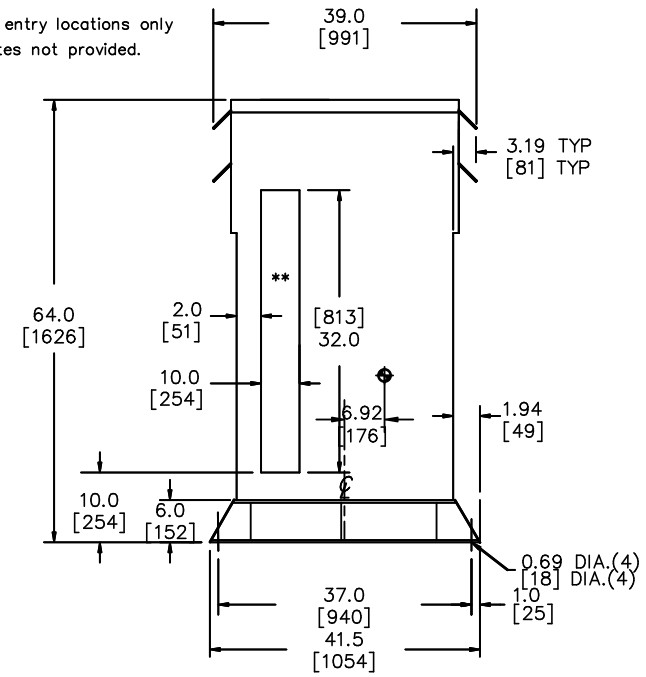

All Dimensions in inches[mm]

ENCLOSURE COLOR : ANSI 61 GREY – OUTDOOR

HV TERMINAL DETAIL

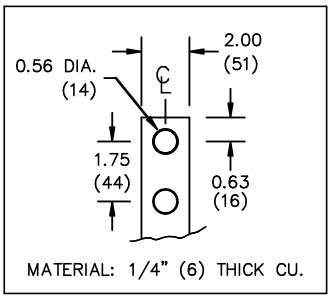

LV TERMINAL DETAIL

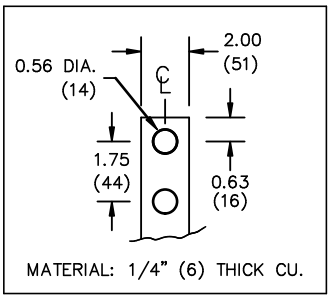

X0 TERMINAL DETAIL

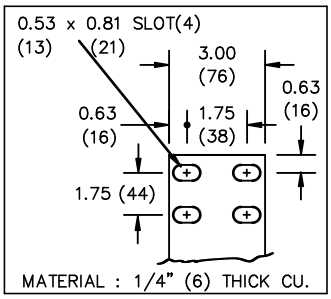

CUSTOMER NOTES:

- HV TERMINATED AT TOP FRONT
- LV TERMINATED AT BOTTOM FRONT
- X0 TERMINATED AT BOTTOM FRONT

200% RATED NEUTRAL PROVIDED

Hammond Power Solutions Inc.

TITLE: 3PH DISTRIBUTION TRANSFORMER

NO.	DATE	BY	REVISION	
2	21/07/16	PP	EDB UPDATE	DES: RMOVVA
1	20/03/17	PP	SEISMIC UPDATE	DATE: 19/11/08
				SCALE: NTS

SHEET 2 OF 3

EDB SK3A0500KK3K

2.0 jwen 2021/07/16 14:27

ENCLOSURE BOTTOM VIEW

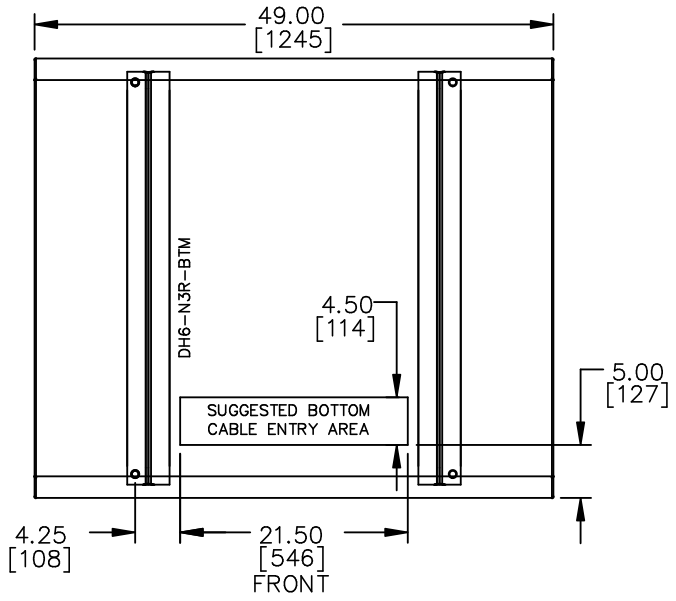

NOTE:
WHEN BOTTOM CABLE ENTRY IS OPTED, THE SPACE USED FOR CONDUITS IN THE FRONT OF THE TRANSFORMER SHOULD NOT OBSTRUCT MORE THAN 50% OF THE FRONT AIR INTAKE AREA DEFINED BETWEEN THE BOTTOM PLATE AND THE SUPPORTING LEGS.
SEE MANUAL FOR ADDITIONAL INFORMATION

Hammond Power Solutions Inc.

TITLE: 3PH DISTRIBUTION TRANSFORMER ENCLOSURE BOTTOM VIEW

NO.	DATE	BY	REVISION	
2	21/07/16	PP	EDB UPDATE	DES: RMOVVA
1	20/03/17	PP	SEISMIC UPDATE	DATE: 19/11/08
				SCALE: NTS

SHEET 3 OF 3

EDBSK3A0500KK3K

2.0 jwen 2021/07/16 14:27