hammond POWER SOLUTIONS

HPS Sentinel™ K

Energy Efficient Distribution Transformer

Transformateur de Distribution à Bon Rendement Énergétique

Hyderabad, IN | Guelph, ONT Compton, CA | Baraboo, WI Monterrey, MX

Part No. SK3A0225KK3K

LR 3902

DRY TYPE TRANSFORMER 77U5 E112313 LISTED

8 03423 13067 1

ALSO VERIFIED IN ACCORDANCE TO ENERGY STANDARD C802.2-18 BY UNDERWRITERS LABORATORIES INC. 3VJ6

Cust. Ref. / Ref. du Client		Serial No. / No. de Serie	
Phase	3	HV/HT	480V 271A
Type	K	BIL	10 kV
Cooling / Refroidissement	ANN	Term / Bornes	H1 H2 H3
kVA	225	LV/BT	480Y/277V 271A
Temp. Rise / Echauffement	150 °C	BIL	10 kV
Temp Class / Classe Temp	220°C	Term / Bornes	X0 X1 X2 X3
Winding / Enroulement	CU	Energy Regulations	DOE 10 CFR PART 431:2016
Frequency / Frequence Hz	60	Reglements de Energetique	CEE ACT SOR/2018-201
Impedance % @ 170 °C	4.1	Suitable for non-sinusoidal current load with K-factor not to exceed / Convient à des courants non-sinusoïdaux avec facteur K n'excédant pas	13
Encl Type / Type De Coffrage	3R		
Weight / Poids lbs	1500		

VOLTS	CURRENT COURANT	% RATED VOLTAGE % TENSION NOMINALE	CONNECTION EACH PHASE CONNEXION PAR PHASE
504	258	105	1
492	264	102.5	2
480	271	100	3
468	278	97.5	4
456	285	95	5
444	293	92.5	6
432	301	90	7

SPACINGS BETWEEN ANY VENTILATED ENCLOSURE PANEL AND ANY ADJACENT WALL SHALL BE A MINIMUM OF 5 INCHES EXCEPT WHEN WALL MOUNTED USING APPROVED WALL MOUNTING KIT

ELECTROSTATIC SHIELD

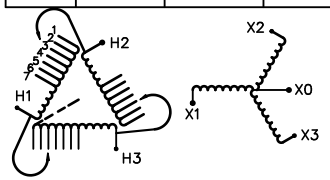

SEISMIC QUALIFICATIONS:
AS FLOOR MOUNT ONLY
IBC 2018/ASCE 7-16
SDS<=2.0g Z/h=1 Ip=1.5

d00018 7hb

hammond POWER SOLUTIONS

TITLE: 3PH DISTRIBUTION TRANSFORMER NAMEPLATE INFORMATION

NO.	DATE	BY	REVISION
2	21/07/16	PP	EDB UPDATE
1	20/03/17	PP	SEISMIC UPDATE

SCALE: NTS | DATE: 17/10/06 | DES: RMOVVA

SHEET 1 OF 3

EDBSK3A0225KK3K

2.0 httpd 2026/07/11 21:24

THIS DRAWING CONTAINS STRICTLY CONFIDENTIAL INFORMATION BELONGING TO HAMMOND POWER SOLUTIONS AND MUST NOT BE DISTRIBUTED OUTSIDE AUTHORIZED PARTIES.

FRONT VIEW

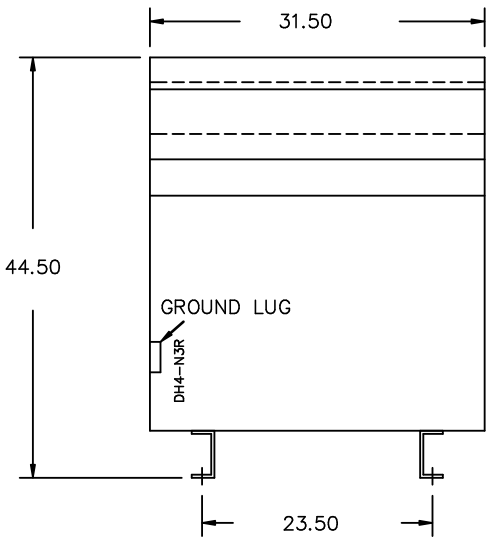

SIDE VIEW

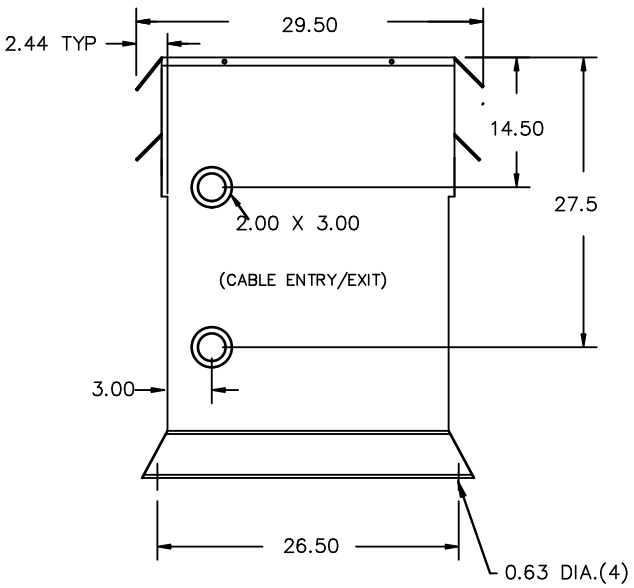

All Dimensions in inches

ENCLOSURE COLOR :ANSI 61 GREY – OUTDOOR

HV TERMINAL DETAIL

MECHANICAL TYPE LUGS INCLUDED
SUITABLE FOR 350MCM-6 CU/AL
CONDUCTORS
2 CONDUCTORS PER PHASE

LV TERMINAL DETAIL

MECHANICAL TYPE LUGS INCLUDED
SUITABLE FOR 600MCM-2 CU/AL
CONDUCTORS
1 CONDUCTOR PER PHASE

CUSTOMER NOTES:

- HV TERMINATED AT TOP FRONT
- LV TERMINATED AT BOTTOM FRONT

200% RATED NEUTRAL X0 HAS QTY 2 LUGS

THIS DRAWING CONTAINS STRICTLY CONFIDENTIAL INFORMATION BELONGING TO HAMMOND POWER SOLUTIONS AND MUST NOT BE DISTRIBUTED OUTSIDE AUTHORIZED PARTIES.

hammond POWER SOLUTIONS

TITLE: 3PH DISTRIBUTION TRANSFORMER

NO.	DATE	BY	REVISION
2	21/07/16	PP	EDB UPDATE
1	20/03/17	PP	SEISMIC UPDATE

DES: RMOVVA
DATE: 17/10/06
SCALE: NTS

SHEET 2 OF 3

EDB SK3A0225KK3K

2.0 Http 2026/07/11 21:24

ENCLOSURE BOTTOM VIEW

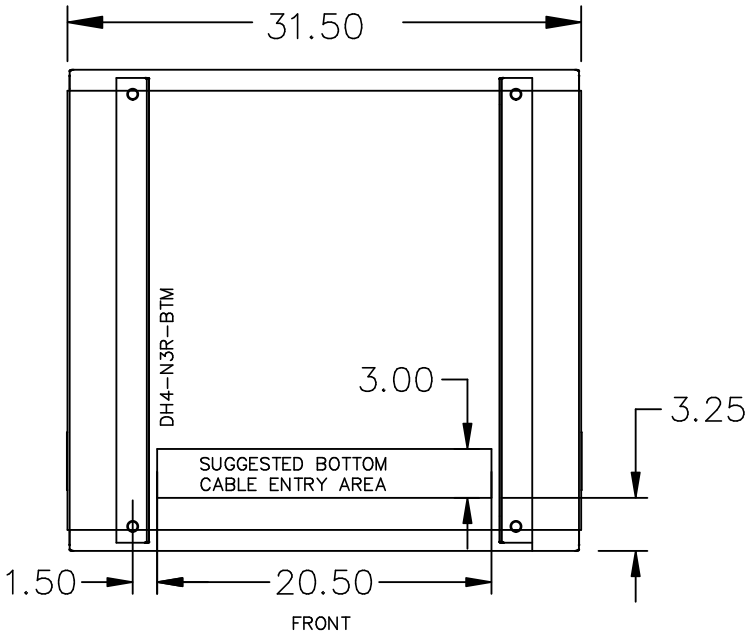

NOTE:
WHEN BOTTOM CABLE ENTRY IS OPTED, THE SPACE USED FOR CONDUITS IN THE FRONT OF THE TRANSFORMER SHOULD NOT OBSTRUCT MORE THAN 50% OF THE FRONT AIR INTAKE AREA DEFINED BETWEEN THE BOTTOM PLATE AND THE SUPPORTING LEGS.
SEE MANUAL FOR ADDITIONAL INFORMATION

THIS DRAWING CONTAINS STRICTLY CONFIDENTIAL INFORMATION BELONGING TO HAMMOND POWER SOLUTIONS AND MUST NOT BE DISTRIBUTED OUTSIDE AUTHORIZED PARTIES.

hammond POWER SOLUTIONS

TITLE: 3PH DISTRIBUTION TRANSFORMER ENCLOSURE BOTTOM VIEW

NO.	DATE	BY	REVISION
2	21/07/16	PP	EDB UPDATE
1	20/03/17	PP	SEISMIC UPDATE

DES: RMOVVA
DATE: 17/10/06
SCALE: NTS

SHEET 3 OF 3

EDBSK3A0225KK3K

2.0 Hpd 2026/07/11 21:24