hammond POWER SOLUTIONS

HPS Sentinel™ K

Energy Efficient Distribution Transformer

Transformateur de Distribution à Bon Rendement Énergétique

Hyderabad, IN | Guelph, ONT Compton, CA | Baraboo, WI Monterrey, MX

Part No. SK3A0112KK3S

LR 3902

DRY TYPE TRANSFORMER 77U5 E112313 LISTED

8 03423 13054 1

ALSO VERIFIED IN ACCORDANCE TO ENERGY STANDARD C802.2-18 BY UNDERWRITERS LABORATORIES INC. 3VJ6

Cust. Ref. / Ref. du Client		Serial No. / No. de Serie	
Phase	3	HV/HT	480V 135A
Type	K	BIL	10 kV
Cooling / Refroidissement	ANN	Term / Bornes	H1 H2 H3
kVA	112.5	LV/BT	480Y/277V 135A
Temp. Rise / Echauffement	150 °C	BIL	10 kV
Temp Class / Classe Temp	220°C	Term / Bornes	X0 X1 X2 X3
Winding / Enroulement	AL	Energy Regulations	DOE 10 CFR PART 431:2016
Frequency / Frequence Hz	60	Reglements de Energetique	CEE ACT SOR/2018-201
Impedance % @ 170 °C	5.9	Suitable for non-sinusoidal current load with K-factor not to exceed / Convient à des courants non-sinusoïdaux avec facteur K n'excédant pas	13
Encl Type / Type De Coffrage	3R		
Weight / Poids lbs	700		

VOLTS	CURRENT COURANT	% RATED VOLTAGE % TENSION NOMINALE	CONNECTION EACH PHASE CONNEXION PAR PHASE
504	129	105	1
492	132	102.5	2
480	135	100	3
468	139	97.5	4
456	142	95	5
444	146	92.5	6
432	150	90	7

SPACINGS BETWEEN ANY VENTILATED ENCLOSURE PANEL AND ANY ADJACENT WALL SHALL BE A MINIMUM OF 5 INCHES EXCEPT WHEN WALL MOUNTED USING APPROVED WALL MOUNTING KIT

ELECTROSTATIC SHIELD

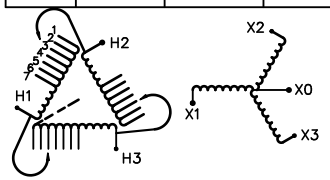

SEISMIC QUALIFICATIONS:
AS FLOOR MOUNT ONLY
IBC 2018/ASCE 7-16
SDS<=2.0g Z/h=1 Ip=1.5

d00018 7hb

hammond POWER SOLUTIONS

TITLE: 3PH DISTRIBUTION TRANSFORMER NAMEPLATE INFORMATION

NO.	DATE	BY	REVISION
2	21/07/16	PP	EDB UPDATE
1	20/03/17	PP	SEISMIC UPDATE

DES: PPICASSI
DATE: 19/07/03
SCALE: NTS

SHEET 1 OF 3

EDBSK3A0112KK3S

2.0 httpd 2026/07/12 01:19

THIS DRAWING CONTAINS STRICTLY CONFIDENTIAL INFORMATION BELONGING TO HAMMOND POWER SOLUTIONS AND MUST NOT BE DISTRIBUTED OUTSIDE AUTHORIZED PARTIES.

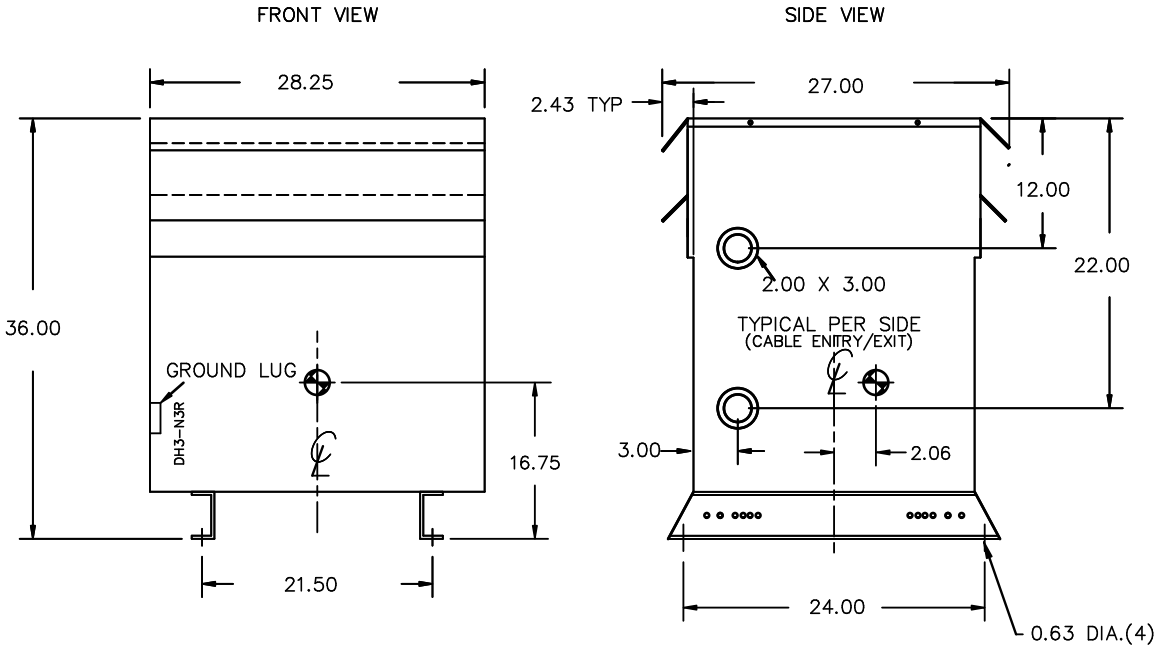

All Dimensions in inches

ENCLOSURE COLOR :ANSI 61 GREY – OUTDOOR

HV TERMINAL DETAIL

MECHANICAL TYPE LUGS INCLUDED
SUITABLE FOR 250MCM–6 CU/AL
CONDUCTORS
1 CONDUCTOR PER PHASE

LV TERMINAL DETAIL

MECHANICAL TYPE LUGS INCLUDED
SUITABLE FOR 250MCM–6 CU/AL
CONDUCTORS
1 CONDUCTOR PER PHASE

X0 TERMINAL DETAIL

MECHANICAL TYPE LUGS INCLUDED
SUITABLE FOR 600MCM–2 CU/AL
CONDUCTORS
1 CONDUCTOR PER PHASE

CUSTOMER NOTES:

- HV TERMINATED AT TOP FRONT
- LV TERMINATED AT BOTTOM FRONT
- X0 TERMINATED AT BOTTOM FRONT

200% RATED NEUTRAL PROVIDED

THIS DRAWING CONTAINS STRICTLY CONFIDENTIAL INFORMATION BELONGING TO HAMMOND POWER SOLUTIONS AND MUST NOT BE DISTRIBUTED OUTSIDE AUTHORIZED PARTIES.

hammond POWER SOLUTIONS

TITLE: 3PH DISTRIBUTION TRANSFORMER

NO.	DATE	BY	REVISION
2	21/07/16	PP	EDB UPDATE
1	20/03/17	PP	SEISMIC UPDATE

DES: PPICASSI
DATE: 19/07/03
SCALE: NTS

SHEET 2 OF 3

EDBSK3A012KK3S

2.0 Hitpd 2026/07/12 01:19

ENCLOSURE BOTTOM VIEW

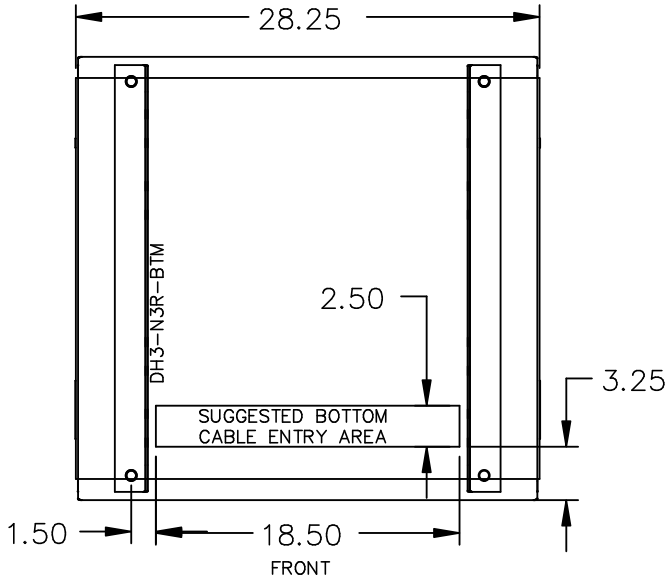

NOTE:
WHEN BOTTOM CABLE ENTRY IS OPTED, THE SPACE USED FOR CONDUITS IN THE FRONT OF THE TRANSFORMER SHOULD NOT OBSTRUCT MORE THAN 50% OF THE FRONT AIR INTAKE AREA DEFINED BETWEEN THE BOTTOM PLATE AND THE SUPPORTING LEGS.
SEE MANUAL FOR ADDITIONAL INFORMATION

hammond POWER SOLUTIONS

TITLE: 3PH DISTRIBUTION TRANSFORMER ENCLOSURE BOTTOM VIEW

NO.	DATE	BY	REVISION	
2	21/07/16	PP	EDB UPDATE	DES: PPICASSI
1	20/03/17	PP	SEISMIC UPDATE	DATE: 19/07/03
				SCALE: NTS

SHEET 3 OF 3

EDBSK3A012KK3S

THIS DRAWING CONTAINS STRICTLY CONFIDENTIAL INFORMATION BELONGING TO HAMMOND POWER SOLUTIONS AND MUST NOT BE DISTRIBUTED OUTSIDE AUTHORIZED PARTIES.

2.0 Http 2026/07/12 01:19