hammond POWER SOLUTIONS

DRY TYPE HARMONIC MITIGATING TRANSFORMER

TRANSFORMATEUR À SEC POUR MITIGATION D'HARMONIQUES

Hyderabad, IN | Guelph, ONT Compton, CA | Baraboo, WI Monterrey, MX

Part No. SH3U0075PB3S

LR 3902

DRY TYPE TRANSFORMER 77U5 E112313 LISTED

8 03423 13515 7

ALSO VERIFIED IN ACCORDANCE TO ENERGY STANDARD C802.2-18 BY UNDERWRITERS LABORATORIES INC. 3VJ6

Cust. Ref. / Ref. du Client		Serial No. / No. de Serie	
Phase	3	Model	
Type	K	HV/HT	600YV
Cooling / Refroidissement	ANN	Term / Bornes	H1 H2 H3
kVA	75	LV/BT	208Z/120V
Temp. Rise / Echauffement	150 °C	Term / Bornes	X1 X2 X3
Temp Class / Classe Temp	220 °C	Neutral	X0(200%)
Winding / Enroulement	AL	Energy Regulations	DOE 10 CFR PART 431:2016
Frequency / Frequence Hz	60	Reglements de Energetique	CEE ACT SOR/2018-201
Impedance % @ 170 °C	5.1	Zo	0.95 MAX
Encl Type / Type De Coffrage	3R	Number of Secondaries	
Weight / Poids lbs/kg	750/341		

VOLTS	CURRENT COURANT	%RATED VOLTAGE %TENSION NOMINALE	CONNECTION EACH PHASE CONNEXION PAR PHASE
630	68.7	105	1
615	70.4	102.5	2
600	72.2	100	3
585	74.0	97.5	4
570	76.0	95	5
555	78.0	92.5	6
540	80.2	90	7

SPACINGS BETWEEN ANY VENTILATED ENCLOSURE PANEL AND ANY ADJACENT WALL SHALL BE A MINIMUM OF 3 INCHES
ELECTROSTATIC SHIELD

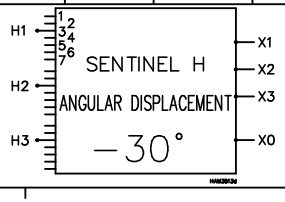

SEISMIC QUALIFICATIONS:
AS FLOOR MOUNT ONLY
IBC 2018/ASCE 7-16
SDS<=2.0g Z/h=1 Ip=1.5

qh001905p

hammond POWER SOLUTIONS

TITLE: 3PH DISTRIBUTION TRANSFORMER NAMEPLATE INFORMATION

NO.	DATE	BY	REVISION
3	21/11/25	CS	NPL IMPEDANCE AND WEIGHT UPDATE
2	21/07/16	PP	EDB UPDATE

SCALE: NTS | DATE: 19/01/25 | DES: LCEN

SHEET 1 OF 3

EDB SH3U0075PB3S

3.1 httpd 2026/07/29 04:45

THIS DRAWING CONTAINS STRICTLY CONFIDENTIAL INFORMATION BELONGING TO HAMMOND POWER SOLUTIONS AND MUST NOT BE DISTRIBUTED OUTSIDE AUTHORIZED PARTIES.

FRONT VIEW

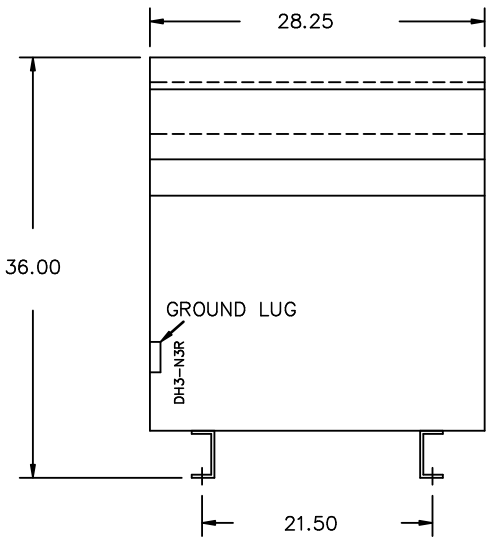

SIDE VIEW

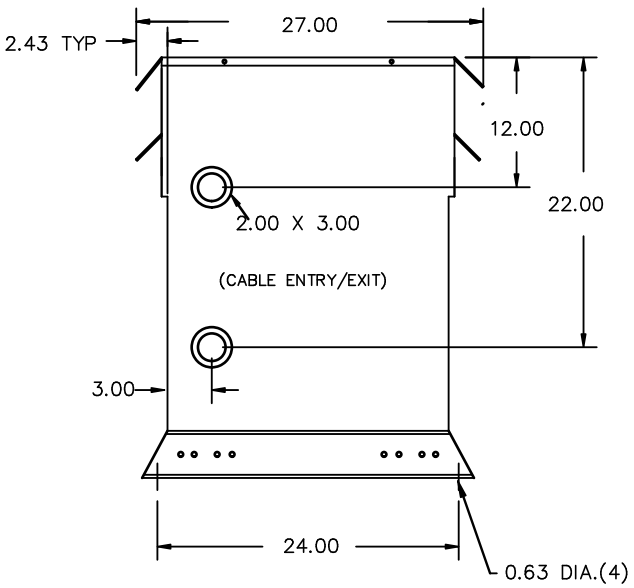

All Dimensions in inches

ENCLOSURE COLOR :ANSI 61 GREY – OUTDOOR

HV TERMINAL DETAIL

MECHANICAL TYPE LUGS INCLUDED
SUITABLE FOR 250MCM–6 CU/AL
CONDUCTORS
1 CONDUCTOR PER PHASE

LV TERMINAL DETAIL

MECHANICAL TYPE LUGS INCLUDED
SUITABLE FOR 600MCM–2 CU/AL
CONDUCTORS
1 CONDUCTOR PER PHASE

X0 TERMINAL DETAIL

MECHANICAL TYPE LUGS INCLUDED
SUITABLE FOR 600MCM–2 CU/AL
CONDUCTORS
2 CONDUCTORS PER PHASE

CUSTOMER NOTES:
- HV TERMINATED AT BOTTOM FRONT
- LV TERMINATED AT TOP FRONT
- X0 TERMINATED AT TOP FRONT

200% RATED NEUTRAL X0 HAS QTY 2 LUGS

hammond POWER SOLUTIONS

TITLE: 3PH DISTRIBUTION TRANSFORMER

NO.	DATE	BY	REVISION
3	21/11/25	CS	NPL IMPEDANCE AND WEIGHT UPDATE
2	21/07/16	PP	EDB UPDATE

DES: LCEN
DATE: 19/01/25
SCALE: NTS

SHEET 2 OF 3

EDBSH3U0075PB3S

THIS DRAWING CONTAINS STRICTLY CONFIDENTIAL INFORMATION BELONGING TO HAMMOND POWER SOLUTIONS AND MUST NOT BE DISTRIBUTED OUTSIDE AUTHORIZED PARTIES.

ENCLOSURE BOTTOM VIEW

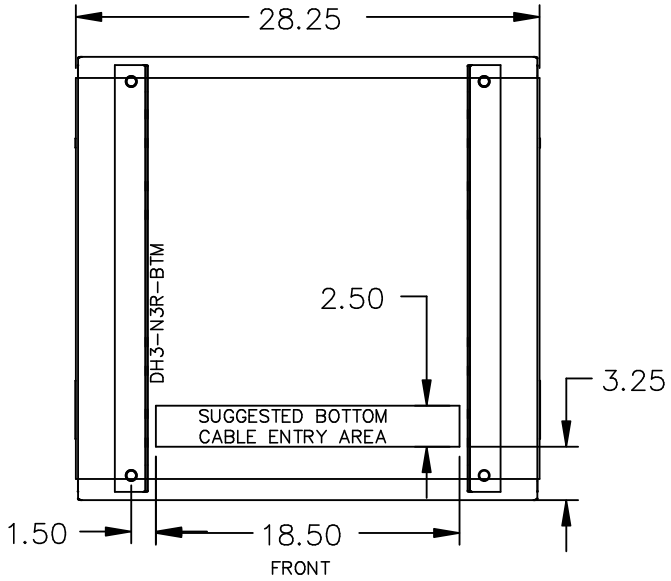

NOTE:
WHEN BOTTOM CABLE ENTRY IS OPTED, THE SPACE USED FOR CONDUITS IN THE FRONT OF THE TRANSFORMER SHOULD NOT OBSTRUCT MORE THAN 50% OF THE FRONT AIR INTAKE AREA DEFINED BETWEEN THE BOTTOM PLATE AND THE SUPPORTING LEGS.
SEE MANUAL FOR ADDITIONAL INFORMATION

hammond POWER SOLUTIONS

TITLE: 3PH DISTRIBUTION TRANSFORMER ENCLOSURE BOTTOM VIEW

NO.	DATE	BY	REVISION
3	21/11/25	CS	NPL IMPEDANCE AND WEIGHT UPDATE
2	21/07/16	PP	EDB UPDATE

DES: LCEN
DATE: 19/01/25
SCALE: NTS

SHEET 3 OF 3

EDBSH3U0075PB3S

THIS DRAWING CONTAINS STRICTLY CONFIDENTIAL INFORMATION BELONGING TO HAMMOND POWER SOLUTIONS AND MUST NOT BE DISTRIBUTED OUTSIDE AUTHORIZED PARTIES.