hammond POWER SOLUTIONS

DRY TYPE HARMONIC MITIGATING TRANSFORMER

TRANSFORMATEUR À SEC POUR MITIGATION D'HARMONIQUES

Hyderabad, IN | Guelph, ONT Compton, CA | Baraboo, WI Monterrey, MX

Part No. SH3T0300KB3S

LR 3902

DRY TYPE TRANSFORMER 77U5 E112313 LISTED

8 03423 13486 0

ALSO VERIFIED IN ACCORDANCE TO ENERGY STANDARD C802.2-18 BY UNDERWRITERS LABORATORIES INC. 3VJ6

Cust. Ref. / Ref. du Client		Serial No. / No. de Serie	
Phase	3	Model	
Type	K	HV/HT	480V
Cooling / Refroidissement	ANN	Term / Bornes	H1 H2 H3
kVA	300	LV/BT	208Z/120V
Temp. Rise / Echauffement	150 °C	Term / Bornes	X1 X2 X3
Temp Class / Classe Temp	220 °C	Neutral	X0(200%)
Winding / Enroulement	AL	Energy Regulations	DOE 10 CFR PART 431:2016
Frequency / Frequence Hz	60	Reglements de Energetique	CEE ACT SOR/2018-201
Impedance % @ 170 °C	4.4	Zo	1.5 MAX
Encl Type / Type De Coffrage	3R	Number of Secondaries	
Weight / Poids lbs	2800		

VOLTS	CURRENT COURANT	%RATED VOLTAGE %TENSION NOMINALE	CONNECTION EACH PHASE CONNEXION PAR PHASE
504	344	105	1-2
492	352	102.5	2-3
480	361	100	3-4
468	370	97.5	4-5
456	380	95	5-6
444	390	92.5	6-7
432	401	90	7-8

SPACINGS BETWEEN ANY VENTILATED ENCLOSURE PANEL AND ANY ADJACENT WALL SHALL BE A MINIMUM OF 5 INCHES EXCEPT WHEN WALL MOUNTED USING APPROVED WALL MOUNTING KIT

ELECTROSTATIC SHIELD

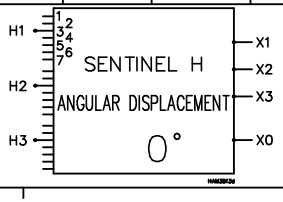

SEISMIC QUALIFICATIONS:
AS FLOOR MOUNT ONLY
IBC 2018/ASCE 7-16
SDS<=2.0g Z/h=0 Ip=1.5

qh0019 0p

hammond POWER SOLUTIONS

TITLE: 3PH DISTRIBUTION TRANSFORMER NAMEPLATE INFORMATION

NO.	DATE	BY	REVISION
3	21/07/16	PP	EDB UPDATE
2	20/03/17	PP	SEISMIC UPDATE

SCALE: NTS | DATE: 20/01/09 | DES: LCEN

SHEET 1 OF 3

EDB SH3T0300KB3S

3.0 httpd 2026/08/18 11:18

THIS DRAWING CONTAINS STRICTLY CONFIDENTIAL INFORMATION BELONGING TO HAMMOND POWER SOLUTIONS AND MUST NOT BE DISTRIBUTED OUTSIDE AUTHORIZED PARTIES.

FRONT VIEW

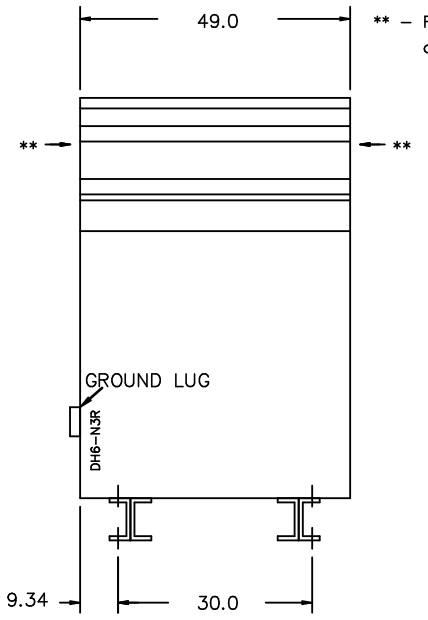

SIDE VIEW

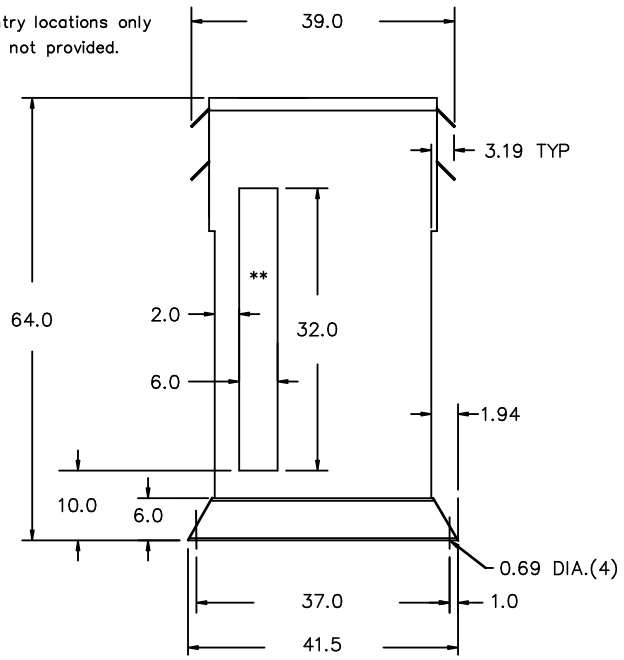

All Dimensions in inches

ENCLOSURE COLOR : ANSI 61 GREY – OUTDOOR

HV TERMINAL DETAIL

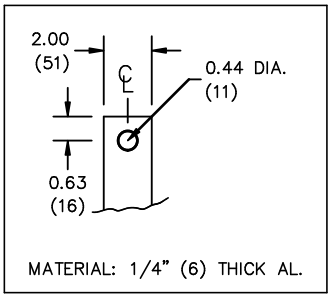

LV TERMINAL DETAIL

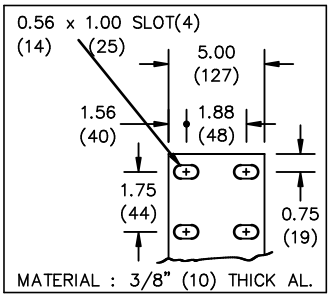

CUSTOMER NOTES:

- HV TERMINATED AT TOP FRONT
- LV TERMINATED AT BOTTOM FRONT

200% RATED NEUTRAL X0 HAS TWO TERMINALS, DIVIDE CABLES EVENLY

hammond POWER SOLUTIONS

TITLE: 3PH DISTRIBUTION TRANSFORMER

NO.	DATE	BY	REVISION
3	21/07/16	PP	EDB UPDATE
2	20/03/17	PP	SEISMIC UPDATE

DES: LCEN
DATE: 20/01/09
SCALE: NTS

SHEET 2 OF 3

EDBSH3T0300KB3S

THIS DRAWING CONTAINS STRICTLY CONFIDENTIAL INFORMATION BELONGING TO HAMMOND POWER SOLUTIONS AND MUST NOT BE DISTRIBUTED OUTSIDE AUTHORIZED PARTIES.

ENCLOSURE BOTTOM VIEW

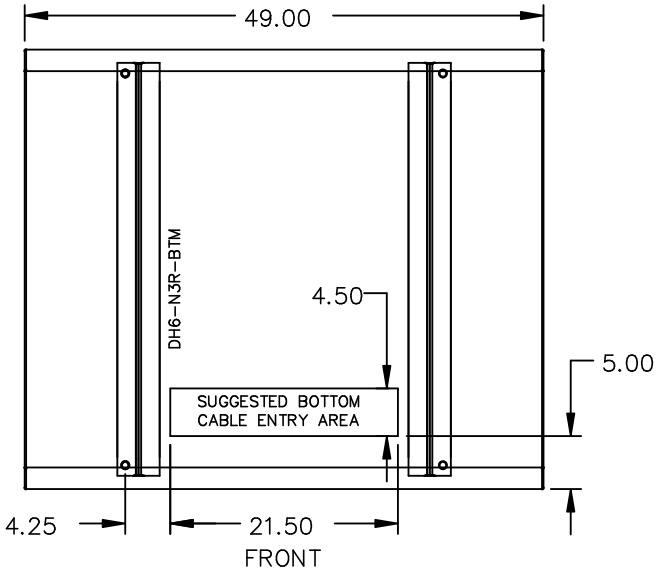

NOTE:
WHEN BOTTOM CABLE ENTRY IS OPTED, THE SPACE USED FOR CONDUITS IN THE FRONT OF THE TRANSFORMER SHOULD NOT OBSTRUCT MORE THAN 50% OF THE FRONT AIR INTAKE AREA DEFINED BETWEEN THE BOTTOM PLATE AND THE SUPPORTING LEGS.
SEE MANUAL FOR ADDITIONAL INFORMATION

hammond POWER SOLUTIONS

TITLE: 3PH DISTRIBUTION TRANSFORMER ENCLOSURE BOTTOM VIEW

NO.	DATE	BY	REVISION
3	21/07/16	PP	EDB UPDATE
2	20/03/17	PP	SEISMIC UPDATE

DES: LCEN
DATE: 20/01/09
SCALE: NTS

SHEET 3 OF 3

EDBSH3T0300KB3S

THIS DRAWING CONTAINS STRICTLY CONFIDENTIAL INFORMATION BELONGING TO HAMMOND POWER SOLUTIONS AND MUST NOT BE DISTRIBUTED OUTSIDE AUTHORIZED PARTIES.