HPS Sentinel™ H

Hammond Power Solutions

DRY TYPE HARMONIC MITIGATING TRANSFORMER
TRANSFORMATEUR À SEC POUR MITIGATION D'HARMONIQUES

Guelph, ONT
Compton, CA
Baraboo, WI
Monterrey, MX

Part No. SH3T0112PB3K

LR 3902

DRY TYPE TRANSFORMER 77U5 E112313 LISTED

8 03423 13538 6

ALSO VERIFIED IN ACCORDANCE TO ENERGY STANDARD C802.2-18 BY UNDERWRITERS LABORATORIES INC. 3VJ6

Cust. Ref. / Ref. du Client		Serial No. / No. de Serie	
Phase	3	Model	
Type	K	HV/HT	600V
Cooling / Refroidissement	ANN	Term / Bornes	H1 H2 H3
kVA	112.5	LV/BT	208Z/120V
Temp. Rise / Echauffement	150 °C	Term / Bornes	X1 X2 X3
Temp Class / Classe Temp	220 °C	Neutral	X0(200%)
Winding / Enroulement	CU	Energy Regulations	DOE 10 CFR PART 431:2016
Frequency / Frequence Hz	60	Reglements de Energetique	CEE ACT SOR/2018-201
Impedance % @ 170 °C	5.2	Z0	0.95 MAX
Encl Type / Type De Coffrage	3R	Number of Secondaries	
Weight / Poids lbs/kg	1000/454		

VOLTS	CURRENT COURANT	%RATED VOLTAGE %TENSION NOMINALE	CONNECTION EACH PHASE CONNEXION PAR PHASE
630	103.1	105	1
615	105.6	102.5	2
600	108.3	100	3
585	111	97.5	4
570	114	95	5
555	117	92.5	6
540	120	90	7

SPACINGS BETWEEN ANY VENTILATED ENCLOSURE PANEL AND ANY ADJACENT WALL SHALL BE A MINIMUM OF 5 INCHES EXCEPT WHEN WALL MOUNTED USING APPROVED WALL MOUNTING KIT

ELECTROSTATIC SHIELD

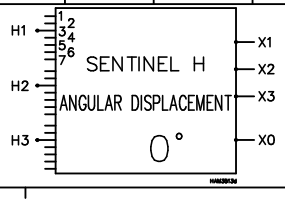

SEISMIC QUALIFICATIONS:
AS FLOOR MOUNT ONLY
IBC 2018/ASCE 7-16
SDS<=2.0g Z/h=1 Ip=1.5

qHO6190P

Hammond Power Solutions Inc.

TITLE: 3PH DISTRIBUTION TRANSFORMER NAMEPLATE INFORMATION

NO.	DATE	BY	REVISION
2	21/07/16	PP	EDB UPDATE
1	20/03/17	PP	SEISMIC UPDATE

SCALE: NTS
DATE: 18/07/06
DES: DCORTEZ

SHEET 1 OF 3

EDBSH3T0112PB3K

2.0 jwen 2021/09/17 14:09

FRONT VIEW

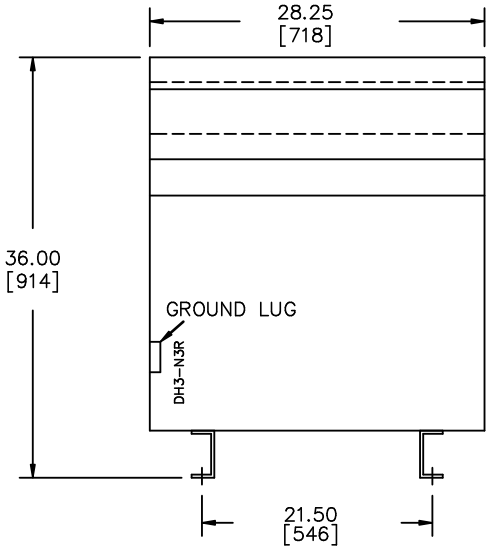

SIDE VIEW

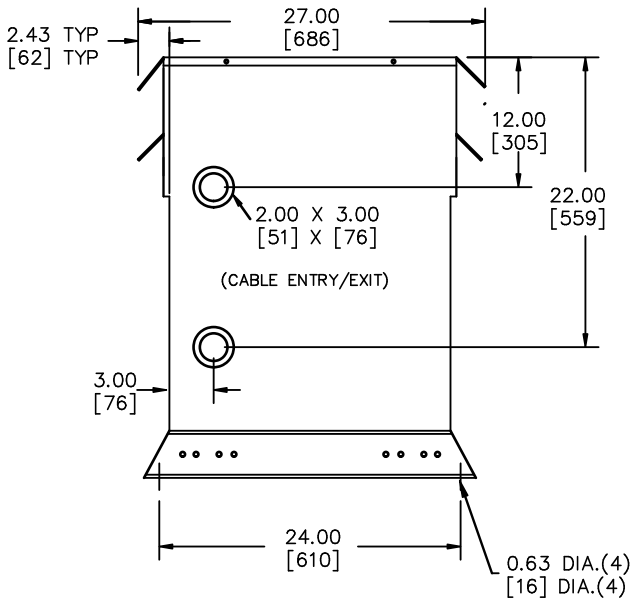

All Dimensions in inches[mm]

ENCLOSURE COLOR :ANSI 61 GREY – OUTDOOR

HV TERMINAL DETAIL

MECHANICAL TYPE LUGS INCLUDED
SUITABLE FOR 250MCM–6 CU/AL
CONDUCTORS
1 CONDUCTOR PER PHASE

LV TERMINAL DETAIL

MECHANICAL TYPE LUGS INCLUDED
SUITABLE FOR 350MCM–6 CU/AL
CONDUCTORS
2 CONDUCTORS PER PHASE

CUSTOMER NOTES:

– HV TERMINATED AT BOTTOM FRONT
– LV TERMINATED AT TOP FRONT
200% RATED NEUTRAL X0 HAS TWO TERMINALS, DIVIDE CABLES EVENLY

Hammond Power Solutions Inc.

TITLE: 3PH DISTRIBUTION TRANSFORMER

NO.	DATE	BY	REVISION
2	21/07/16	PP	EDB UPDATE
1	20/03/17	PP	SEISMIC UPDATE

DES: DCORTEZ
DATE: 18/07/06
SCALE: NTS

SHEET 2 OF 3

EDBSH3T0112PB3K

2.0 jwen 2021/09/17 14:09

ENCLOSURE BOTTOM VIEW

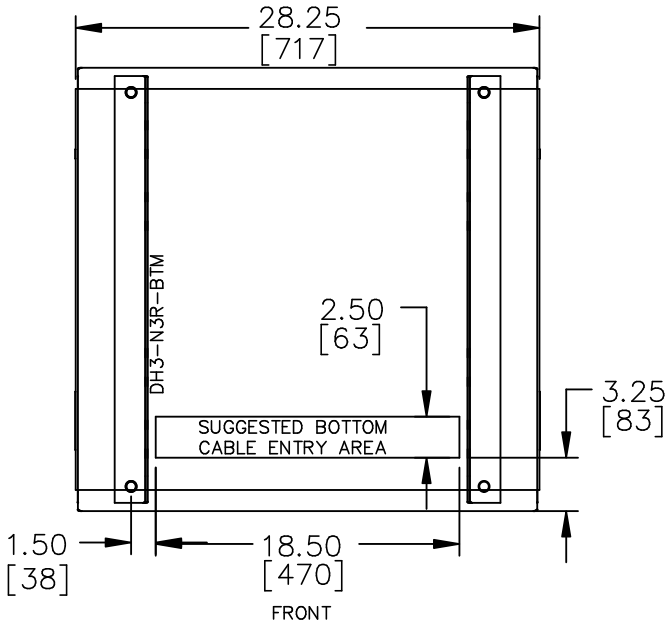

NOTE:
WHEN BOTTOM CABLE ENTRY IS OPTED, THE SPACE USED FOR CONDUITS IN THE FRONT OF THE TRANSFORMER SHOULD NOT OBSTRUCT MORE THAN 50% OF THE FRONT AIR INTAKE AREA DEFINED BETWEEN THE BOTTOM PLATE AND THE SUPPORTING LEGS.
SEE MANUAL FOR ADDITIONAL INFORMATION

Hammond Power Solutions Inc.

TITLE: 3PH DISTRIBUTION TRANSFORMER ENCLOSURE BOTTOM VIEW

NO.	DATE	BY	REVISION	
2	21/07/16	PP	EDB UPDATE	DES: DCORTEZ
1	20/03/17	PP	SEISMIC UPDATE	DATE: 18/07/06
				SCALE: NTS

SHEET 3 OF 3

EDBSH3T0112PB3K

2.0 jwen 2021/09/17 14:09