hammond POWER SOLUTIONS

Energy Efficient
General Purpose Distribution Transformer
Transformateur de Distribution
à usage général économe en énergie

Hyderabad, IN | Guelph, ONT Compton, CA | Baraboo, WI Monterrey, MX

Part No. SG3L0075BE0C

LR 3902

DRY TYPE TRANSFORMER 77U5 E112313 LISTED

ALSO VERIFIED IN ACCORDANCE TO ENERGY STANDARD C802.2-18 BY UNDERWRITERS LABORATORIES INC. 3VJ6

8 03423 14059 5

| | | | |
|---|---|---|---|
| Cust. Ref. / Ref. du Client | | Serial No. / No. de Serie | |
| Phase | 1 | HV/HT | 208V 361A |
| Type | F | BIL | 10 kV |
| Cooling / Refroidissement | ANN | Term Bornes | H1 H2 |
| kVA | 75 | LV/BT | 120/240V 625/312A |
| Temp. Rise / Echauffement | 150 °C | BIL | 10 kV |
| Temp Class / Classe Temp | 220 °C | Term Bornes | X4 X2 X3 X1 |
| Winding / Enroulement | CU | Energy Regulations | DOE 10 CFR PART 431:2016 |
| Frequency / Frequence Hz | 60 | Reglements de Energetique | CEE ACT SOR/2018-201 |
| Impedance % @ 170 °C | 5.9 | | |
| Encl Type / Type De Coffrage | 3R | | |
| Weight / Poids lbs | 525 | | |

| VOLTS | CURRENT COURANT | % RATED VOLTAGE % TENSION NOMINALE | CONNECTION EACH PHASE CONNEXION PAR PHASE |
|---|---|---|---|
| 218 | 343 | 105 | 1-2 |
| 213 | 352 | 102.5 | 2-3 |
| 208 | 361 | 100 | 3-4 |
| 203 | 370 | 97.5 | 4-5 |
| 198 | 380 | 95 | 5-6 |
| 120 | 625 | | X4&X2, X3&X1 |
| 240 | 312 | | X1, X4 |

SPACINGS BETWEEN ANY VENTILATED ENCLOSURE PANEL AND ANY ADJACENT WALL SHALL BE A MINIMUM OF 3 INCHES

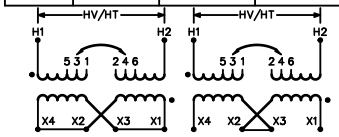


SEISMIC QUALIFICATIONS:
AS FLOOR MOUNT ONLY
IBC 2018/ASCE 7-16
SDS<=2.0g Z/h=1 Ip=1.5

d000186hb

hammond POWER SOLUTIONS

TITLE: 1PH DISTRIBUTION TRANSFORMER NAMEPLATE INFORMATION

| NO. | DATE | BY | REVISION |
|---|---|---|---|
| 2 | 21/07/16 | PP | EDB UPDATE |
| 1 | 20/03/17 | PP | SEISMIC UPDATE |

DES: RMOVVA
DATE: 18/05/01
SCALE: NTS

SHEET 1 OF 3

EDBSG3L0075BE0C

2.0 httpd 2026/08/18 12:24

THIS DRAWING CONTAINS STRICTLY CONFIDENTIAL INFORMATION BELONGING TO HAMMOND POWER SOLUTIONS AND MUST NOT BE DISTRIBUTED OUTSIDE AUTHORIZED PARTIES.

FRONT VIEW

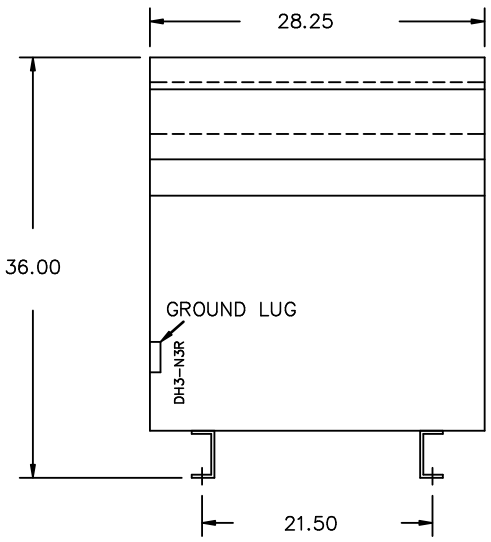


SIDE VIEW

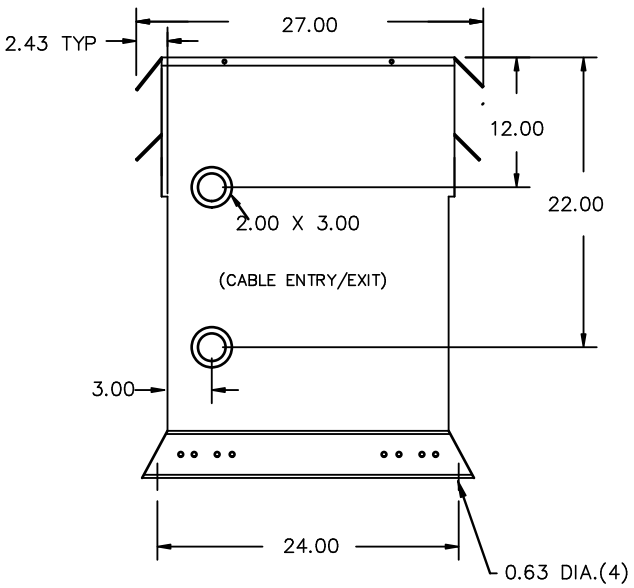


All Dimensions in inches

ENCLOSURE COLOR :ANSI 61 GREY – OUTDOOR

HV TERMINAL DETAIL

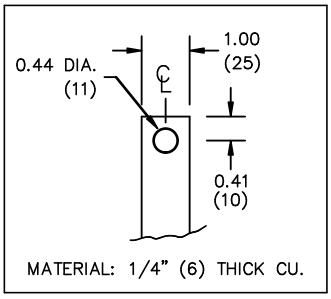


MATERIAL: 1/4" (6) THICK CU.

LV TERMINAL DETAIL

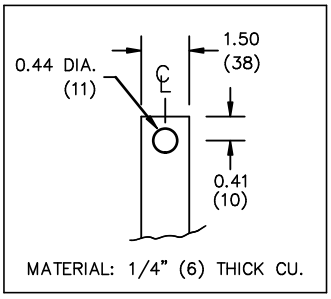


MATERIAL: 1/4" (6) THICK CU.

CUSTOMER NOTES:
- HV TERMINATED AT TOP FRONT
- LV TERMINATED AT BOTTOM FRONT

THIS DRAWING CONTAINS STRICTLY CONFIDENTIAL INFORMATION BELONGING TO HAMMOND POWER SOLUTIONS AND MUST NOT BE DISTRIBUTED OUTSIDE AUTHORIZED PARTIES.

hammond POWER SOLUTIONS

TITLE: 1PH DISTRIBUTION TRANSFORMER

| NO. | DATE | BY | REVISION |
|---|---|---|---|
| 2 | 21/07/16 | PP | EDB UPDATE |
| 1 | 20/03/17 | PP | SEISMIC UPDATE |

DES: RMOVVA
DATE: 18/05/01
SCALE: NTS

SHEET 2 OF 3

EDBSG3L0075BE0C

2.0 Hpd 2026/08/18 12:24

ENCLOSURE BOTTOM VIEW

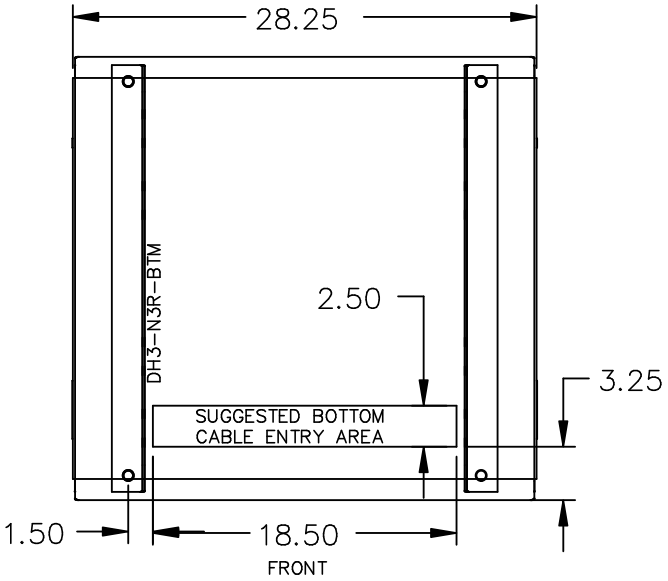


NOTE:
WHEN BOTTOM CABLE ENTRY IS OPTED, THE SPACE USED FOR CONDUITS IN THE FRONT OF THE TRANSFORMER SHOULD NOT OBSTRUCT MORE THAN 50% OF THE FRONT AIR INTAKE AREA DEFINED BETWEEN THE BOTTOM PLATE AND THE SUPPORTING LEGS.
SEE MANUAL FOR ADDITIONAL INFORMATION

THIS DRAWING CONTAINS STRICTLY CONFIDENTIAL INFORMATION BELONGING TO HAMMOND POWER SOLUTIONS AND MUST NOT BE DISTRIBUTED OUTSIDE AUTHORIZED PARTIES.

hammond POWER SOLUTIONS

TITLE: 1PH DISTRIBUTION TRANSFORMER ENCLOSURE BOTTOM VIEW

| NO. | DATE | BY | REVISION |
|---|---|---|---|
| 2 | 21/07/16 | PP | EDB UPDATE |
| 1 | 20/03/17 | PP | SEISMIC UPDATE |

DES: RMOVVA
DATE: 18/05/01
SCALE: NTS

SHEET 3 OF 3

EDBSG3L0075BE0C

2.0 Hpd 2026/08/18 12:24