HPS Sentinel™ G

Energy Efficient Distribution Transformer

Transformateur de Distribution à Bon Rendement Énergétique

Hammond Power Solutions

Guelph, ONT
Compton, CA

Baraboo, WI
Monterrey, MX

Part No. SG3L0050PE

LR 3902

DRY TYPE TRANSFORMER
77U5
E112313
LISTED

8 03423 14118 9

ALSO VERIFIED IN ACCORDANCE TO ENERGY STANDARD C802.2-18 BY UNDERWRITERS LABORATORIES INC. 3VJ6

Cust. Ref. / Ref. du Client		Serial No. / No. de Serie	
Phase	1	HV/HT	600V 83.3A
Type	F	BIL	10 kV
Cooling / Refroidissement	ANN	Term Bornes	H1 H2
kVA	50	LV/BT	120/240V 416.7/208A
Temp. Rise / Echauffement	150 °C	BIL	10 kV
Temp Class / Classe Temp	220 °C	Term Bornes	X4 X3 X2 X1
Winding / Enroulement	AL	Energy Regulations	DOE 10 CFR PART 431:2016
Frequency / Frequence Hz	60	Reglements de Energetique	CEE ACT SOR/2018-201
Impedance % @ 170 °C	5.9		
Encl Type / Type De Coffrage	3R		
Weight / Poids lbs/kg	335/152		

VOLTS	CURRENT COURANT	% RATED VOLTAGE % TENSION NOMINALE	CONNECTION EACH PHASE CONNEXION PAR PHASE
630	79.4	105	1-2
615	81.3	102.5	2-3
600	83.3	100	3-4
585	85.5	97.5	4-5
570	87.7	95	5-6
120	416.7		X4&X2, X3&X1
240	208.3		X1, X4

SPACINGS BETWEEN ANY VENTILATED ENCLOSURE PANEL AND ANY ADJACENT WALL SHALL BE A MINIMUM OF 3 INCHES

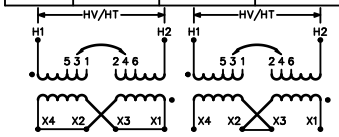

SEISMIC QUALIFICATIONS:
OSP-0136-10/IBC 2018/ASCE 7-16
SDS<=2.0g Z/h=1 Ip=1.5

d0001866b

Hammond Power Solutions Inc.

TITLE: 1PH DISTRIBUTION TRANSFORMER NAMEPLATE INFORMATION

NO.	DATE	BY	REVISION
2	21/07/16	PP	EDB UPDATE
1	20/03/17	PP	SEISMIC UPDATE

DES: PPICASSI
DATE: 17/04/27
SCALE: NTS

SHEET 1 OF 3

EDBSG3L0050PE

2.0 jwen 2021/07/16 13:50

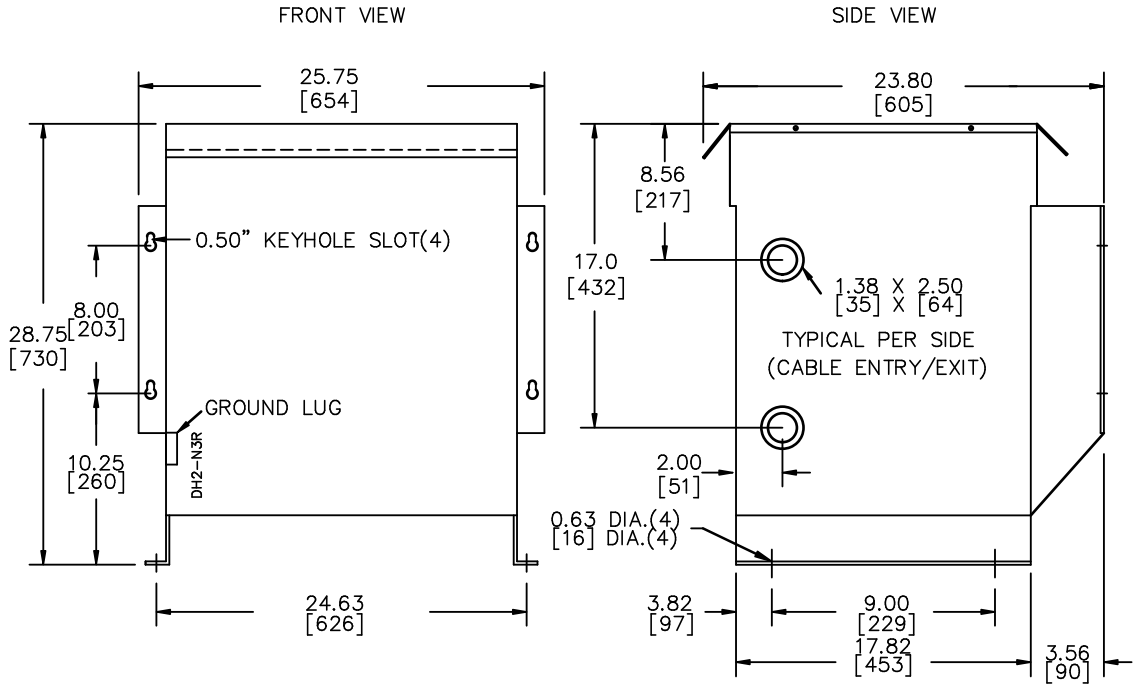

All Dimensions in inches[mm]

ENCLOSURE COLOR : ANSI 61 GREY – OUTDOOR

HV TERMINAL DETAIL

MECHANICAL TYPE LUGS INCLUDED
SUITABLE FOR #2/0–14 CU/AL
CONDUCTORS
1 CONDUCTOR PER PHASE

LV TERMINAL DETAIL

MECHANICAL TYPE LUGS INCLUDED
SUITABLE FOR 600MCM–2 CU/AL
CONDUCTORS
1 CONDUCTOR PER PHASE

CUSTOMER NOTES:
- HV TERMINATED AT TOP FRONT
- LV TERMINATED AT BOTTOM FRONT

Hammond Power Solutions Inc.

TITLE: 1PH DISTRIBUTION TRANSFORMER

NO.	DATE	BY	REVISION
2	21/07/16	PP	EDB UPDATE
1	20/03/17	PP	SEISMIC UPDATE

DES: PPICASSI
DATE: 17/04/27
SCALE: NTS

SHEET 2 OF 3

EDBSG3L0050PE

2.0 jwen 2021/07/16 13:50

ENCLOSURE BOTTOM VIEW

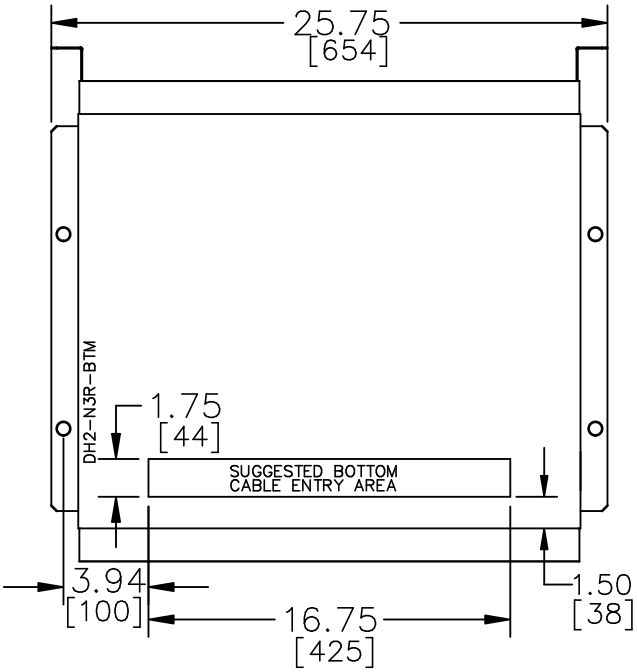

NOTE:
WHEN BOTTOM CABLE ENTRY IS OPTED, THE SPACE USED FOR CONDUITS IN THE FRONT OF THE TRANSFORMER SHOULD NOT OBSTRUCT MORE THAN 50% OF THE FRONT AIR INTAKE AREA DEFINED BETWEEN THE BOTTOM PLATE AND THE SUPPORTING LEGS.
SEE MANUAL FOR ADDITIONAL INFORMATION

Hammond Power Solutions Inc.

TITLE: 1PH DISTRIBUTION TRANSFORMER ENCLOSURE BOTTOM VIEW

NO.	DATE	BY	REVISION	
2	21/07/16	PP	EDB UPDATE	DES: PPICASSI
1	20/03/17	PP	SEISMIC UPDATE	DATE: 17/04/27
				SCALE: NTS

SHEET 3 OF 3

EDBSG3L0050PE

2.0 jwen 2021/07/16 13:50