HPS Sentinel™ G

Energy Efficient Distribution Transformer

Transformateur de Distribution à Bon Rendement Énergétique

Hammond Power Solutions

Hyderabad, IN | Guelph, ONT Compton, CA | Baraboo, WI Monterrey, MX

Part No. SG3L0050HE

LR 3902

DRY TYPE TRANSFORMER 77U5 E112313 LISTED

ALSO VERIFIED IN ACCORDANCE TO ENERGY STANDARD C802.2-18 BY UNDERWRITERS LABORATORIES INC. 3VJ6

Cust. Ref. / Ref. du Client		Serial No. / No. de Serie	
Phase	1	HV/HT	416V 120A
Type	F	BIL	10 kV
Cooling / Refroidissement	ANN	Term / Bornes	H1 H2
kVA	50	LV/BT	120/240V 417/208A
Temp. Rise / Echauffement	150 °C	BIL	10 kV
Temp Class / Classe Temp	220 °C	Term / Bornes	X4 X2 X3 X1
Winding / Enroulement	AL	Energy Regulations	DOE 10 CFR PART 431:2016
Frequency / Frequence Hz	60	Reglements de Energetique	CEE ACT SOR/2018-201
Impedance % @ 170 °C	5.9		
Encl Type / Type De Coffrage	3R		
Weight / Poids lbs/kg	340/155		

VOLTS	CURRENT / COURANT	% RATED VOLTAGE / % TENSION NOMINALE	CONNECTION EACH PHASE / CONNEXION PAR PHASE
437	114	105	1–2
426	117	102.5	2–3
416	120	100	3–4
406	123	97.5	4–5
395	127	95	5–6
120	417		X4&X2, X3&X1
240	208		X1, X4

SPACINGS BETWEEN ANY VENTILATED ENCLOSURE PANEL AND ANY ADJACENT WALL SHALL BE A MINIMUM OF 3 INCHES

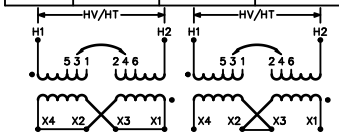

SEISMIC QUALIFICATIONS:
OSP-0136-10/IBC 2018/ASCE 7-16
SDS<=2.0g Z/h=1 Ip=1.5

d0001986b

Hammond Power Solutions Inc.

TITLE: 1PH DISTRIBUTION TRANSFORMER NAMEPLATE INFORMATION

NO.	DATE	BY	REVISION

DES: RMOVVA
DATE: 23/06/28
SCALE: NTS

SHEET 1 OF 3

EDBSG3L0050HE

0.0 rmovva 2023/06/28 15:12

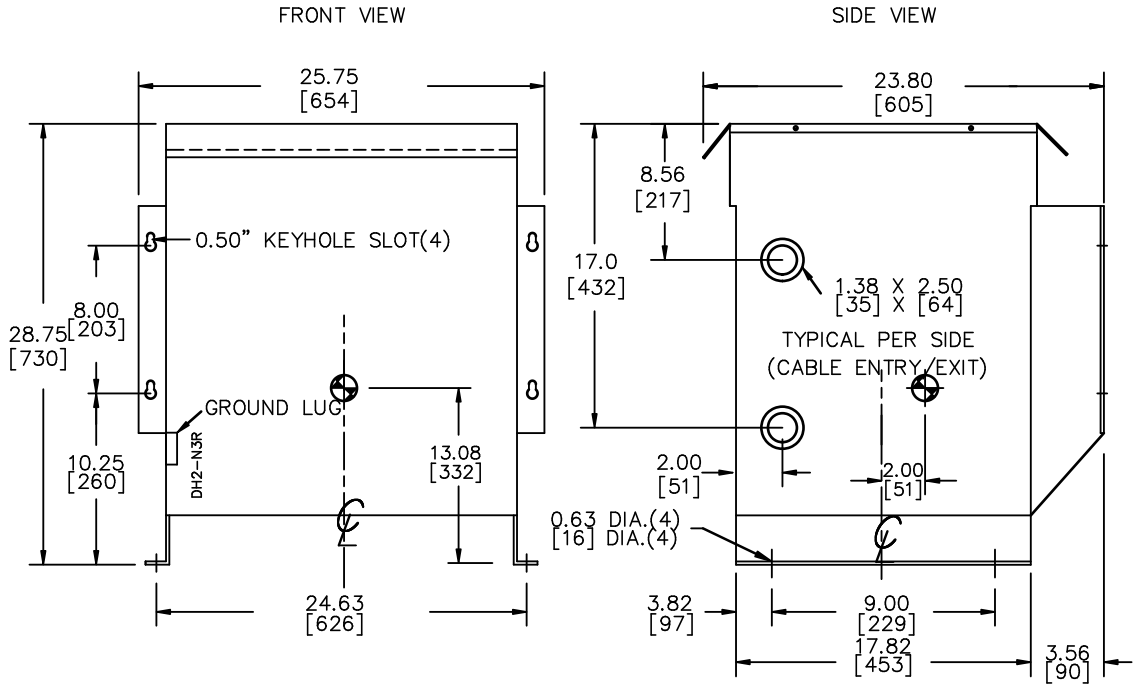

All Dimensions in inches[mm]

ENCLOSURE COLOR : ANSI 61 GREY – OUTDOOR

HV TERMINAL DETAIL

MECHANICAL TYPE LUGS INCLUDED
SUITABLE FOR 250MCM–6 CU/AL
CONDUCTORS
1 CONDUCTOR PER PHASE

LV TERMINAL DETAIL

MECHANICAL TYPE LUGS INCLUDED
SUITABLE FOR 600MCM–2 CU/AL
CONDUCTORS
1 CONDUCTOR PER PHASE

CUSTOMER NOTES:
- HV TERMINATED AT TOP FRONT
- LV TERMINATED AT BOTTOM FRONT

Hammond Power Solutions Inc.

TITLE: 1PH DISTRIBUTION TRANSFORMER

NO.	DATE	BY	REVISION

DES: RMOVVA
DATE: 23/06/28
SCALE: NTS

SHEET 2 OF 3

EDBSG3L0050HE

0.0 rmovva 2023/06/28 15:12

ENCLOSURE BOTTOM VIEW

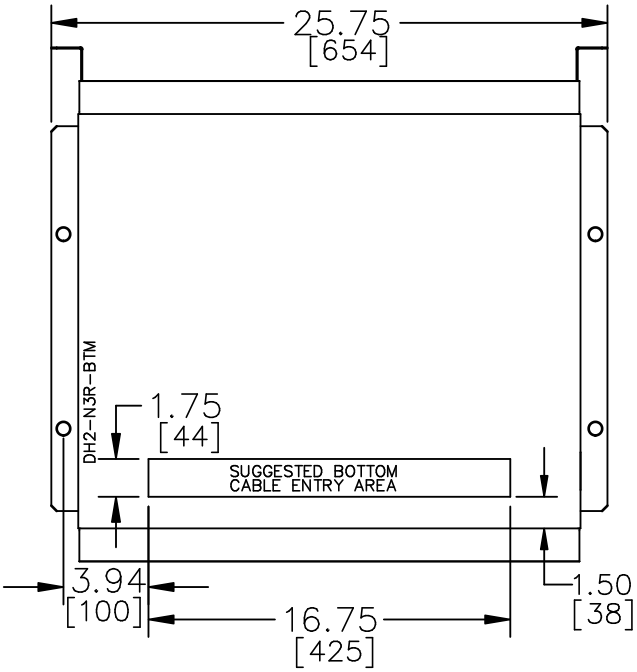

NOTE:
WHEN BOTTOM CABLE ENTRY IS OPTED, THE SPACE USED FOR CONDUITS IN THE FRONT OF THE TRANSFORMER SHOULD NOT OBSTRUCT MORE THAN 50% OF THE FRONT AIR INTAKE AREA DEFINED BETWEEN THE BOTTOM PLATE AND THE SUPPORTING LEGS.
SEE MANUAL FOR ADDITIONAL INFORMATION

Hammond Power Solutions Inc.

TITLE:	1PH DISTRIBUTION TRANSFORMER ENCLOSURE BOTTOM VIEW			
				DES: RMOVVA
				DATE: 23/06/28
NO.	DATE	BY	REVISION	SCALE: NTS

SHEET 3 OF 3

EDBSG3L0050HE

0.0 rmovva 2023/06/28 15:12