hammond POWER SOLUTIONS

HPS Sentinel™ G

Energy Efficient Distribution Transformer

Transformateur de Distribution à Bon Rendement Énergétique

Hyderabad, IN | Guelph, ONT Compton, CA | Baraboo, WI Monterrey, MX

Part No. SG3C0750KD0C

LR 3902

DRY TYPE TRANSFORMER 77U5 E112313 LISTED

8 03423 12791 6

ALSO VERIFIED IN ACCORDANCE TO ENERGY STANDARD C802.2-18 BY UNDERWRITERS LABORATORIES INC.® 3VJ6

Cust. Ref. / Ref. du Client		Serial No. / No. de Serie	
Phase	3	HV/HT	480V 902A
Type	K	BIL	10 kV
Cooling / Refroidissement	ANN	Term Bornes	H1 H2 H3
kVA	750	LV/BT	240V 1804A
Temp. Rise / Echauffement	150 °C	BIL	10 kV
Temp Class / Classe Temp	220 °C	Term Bornes	X1 X2 X3
Winding / Enroulement	CU	Energy Regulations	DOE 10 CFR PART 431:2016
Frequency / Frequence Hz	60	Reglements de Energetique	CEE ACT SOR/2018-201
Impedance % @ 170 °C	5.5		
Encl Type / Type De Coffrage	3R		
Weight / Poids lbs/kg	4710/2137		

VOLTS	CURRENT COURANT	% RATED VOLTAGE % TENSION NOMINALE	CONNECTION EACH PHASE CONNEXION PAR PHASE
504	859	105	1-2
492	880	102.5	2-3
480	902	100	3-4
468	925	97.5	4-5
456	950	95	5-6
444	975	92.5	6-7
432	1002	90	7-8

SPACINGS BETWEEN ANY VENTILATED ENCLOSURE PANEL AND ANY ADJACENT WALL SHALL BE A MINIMUM OF 12 INCHES
X6=120V CT, 5% OF KVA RATING MAXIMUM

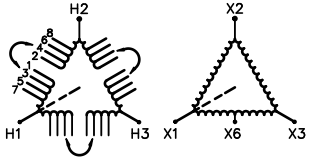

SEISMIC QUALIFICATIONS:
AS FLOOR MOUNT ONLY
IBC 2018/ASCE 7-16
SDS<=2.0g Z/h=0 Ip=1.5

d0001186hb

hammond POWER SOLUTIONS

TITLE: 3PH DISTRIBUTION TRANSFORMER NAMEPLATE INFORMATION

NO.	DATE	BY	REVISION

DES: DCORTEZ
DATE: 25/01/16
SCALE: NTS

SHEET 1 OF 3

EDB SG3C0750KD0C

0.1 jasmith 2025/01/17 13:07

FRONT VIEW

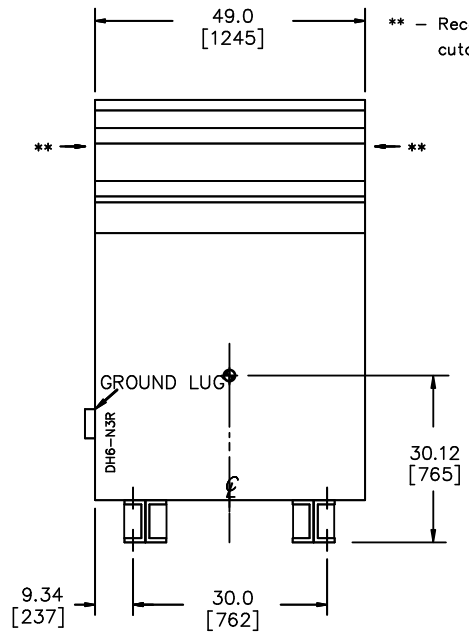

** – Recommended cable entry locations only
cutouts & gland plates not provided.

SIDE VIEW

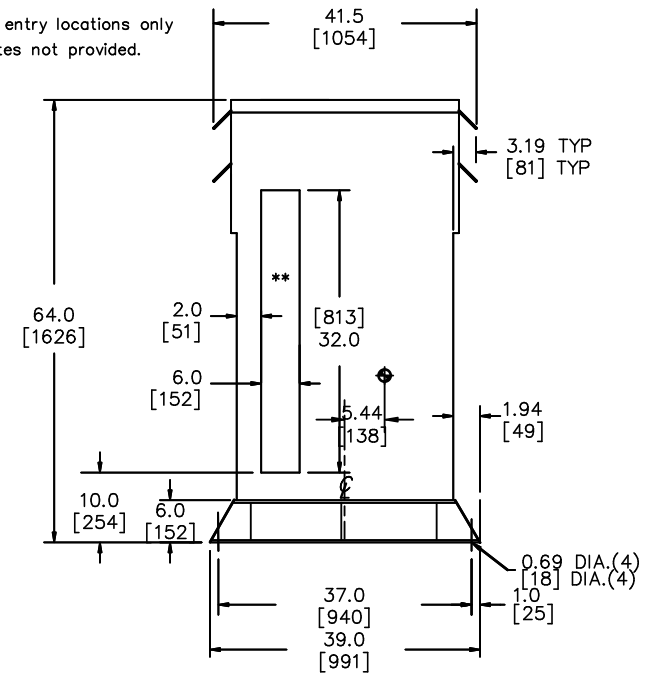

All Dimensions in inches[mm]

ENCLOSURE COLOR : ANSI 61 GREY – OUTDOOR

HV TERMINAL DETAIL

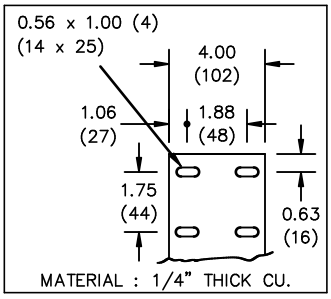

MATERIAL : 1/4" THICK CU.

LV TERMINAL DETAIL

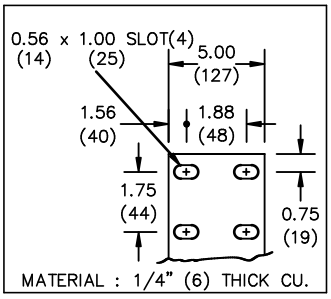

MATERIAL : 1/4" (6) THICK CU.

CUSTOMER NOTES:

- HV TERMINATED AT TOP FRONT
- LV TERMINATED AT BOTTOM FRONT FOR X1 X2 X3
- LV TERMINATED AT BOTTOM FRONT FOR X6

hammond POWER SOLUTIONS

TITLE: 3PH DISTRIBUTION TRANSFORMER

NO.	DATE	BY	REVISION

DES: DCORTEZ
DATE: 25/01/16
SCALE: NTS

SHEET 2 OF 3

EDBSG3C0750KD0C

0.1 jasmith 2025/01/17 13:07

ENCLOSURE BOTTOM VIEW

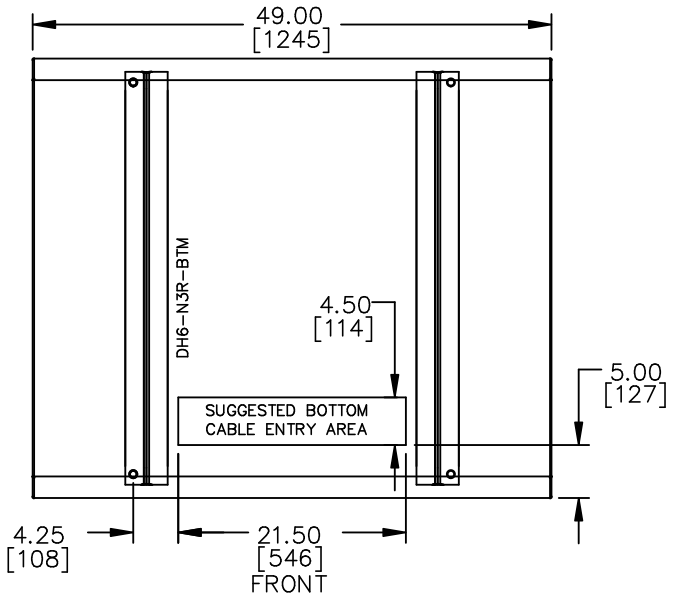

NOTE:
WHEN BOTTOM CABLE ENTRY IS OPTED, THE SPACE USED FOR CONDUITS IN THE FRONT OF THE TRANSFORMER SHOULD NOT OBSTRUCT MORE THAN 50% OF THE FRONT AIR INTAKE AREA DEFINED BETWEEN THE BOTTOM PLATE AND THE SUPPORTING LEGS.
SEE MANUAL FOR ADDITIONAL INFORMATION

hammond POWER SOLUTIONS

TITLE: 3PH DISTRIBUTION TRANSFORMER ENCLOSURE BOTTOM VIEW

NO.	DATE	BY	REVISION

DES: DCORTEZ
DATE: 25/01/16
SCALE: NTS

SHEET 3 OF 3

EDBSC3C0750KD0C

0.1 jasmith 2025/01/17 13:07