HPS Sentinel™ G

Energy Efficient Distribution Transformer

Transformateur de Distribution à Bon Rendement Énergétique

Hammond Power Solutions

Guelph, ONT Compton, CA

Baraboo, WI Monterrey, MX

Part No. SG3A0500KY0C

LR 3902

DRY TYPE TRANSFORMER 77U5 E112313 LISTED

8 03423 12812 8

ALSO VERIFIED IN ACCORDANCE TO ENERGY STANDARD C802.2-18 BY UNDERWRITERS LABORATORIES INC.® 3VJ6

Cust. Ref. / Ref. du Client		Serial No. / No. de Serie	
Phase	3	HV/HT	480V 601 A
Type	K	BIL	10 kV
Cooling / Refroidissement	ANN	Term / Bornes	H1 H2 H3
kVA	500	LV/BT	400Y/231V 721.7 A
Temp. Rise / Echauffement	150 °C	BIL	10 kV
Temp Class / Classe Temp	220 °C	Term / Bornes	X0 X1 X2 X3
Winding / Enroulement	CU	Energy Regulations	DOE 10 CFR PART 431:2016
Frequency / Frequence Hz	60	Reglements de Energetique	CEE ACT SOR/2018-201
Impedance % @ 170 °C	5.5		
Encl Type / Type De Coffrage	3R		
Weight / Poids lbs/kg	3800/1724		

VOLTS	CURRENT COURANT	% RATED VOLTAGE % TENSION NOMINALE	CONNECTION EACH PHASE CONNEXION PAR PHASE
504	573	105	1-2
492	587	102.5	2-3
480	601	100	3-4
468	617	97.5	4-5
456	633	95	5-6
444	650	92.5	6-7
432	668	90	7-8
SECONDARY			
430	671.3		A
416	693.9		B
400	721.7		C
380	759.7		D

SPACINGS BETWEEN ANY VENTILATED ENCLOSURE PANEL AND ANY ADJACENT WALL SHALL BE A MINIMUM OF 12 INCHES

RATIO ERROR +/- 1.0 % ON NOMINAL TAP (480V)

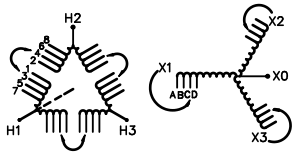

SEISMIC QUALIFICATIONS:
AS FLOOR MOUNT ONLY
IBC 2018/ASCE 7-16
SDS<=2.0g Z/h=0 Ip=1.5

d0001986b

Hammond Power Solutions Inc.

TITLE: 3PH DISTRIBUTION TRANSFORMER NAMEPLATE INFORMATION

NO.	DATE	BY	REVISION
2	21/07/16	PP	EDB UPDATE
1	20/03/17	PP	SEISMIC UPDATE

DES: RMOVVA
DATE: 19/04/04
SCALE: NTS

SHEET 1 OF 3

EDB SG3A0500KY0C

2.0 jwen 2021/07/16 13:31

FRONT VIEW

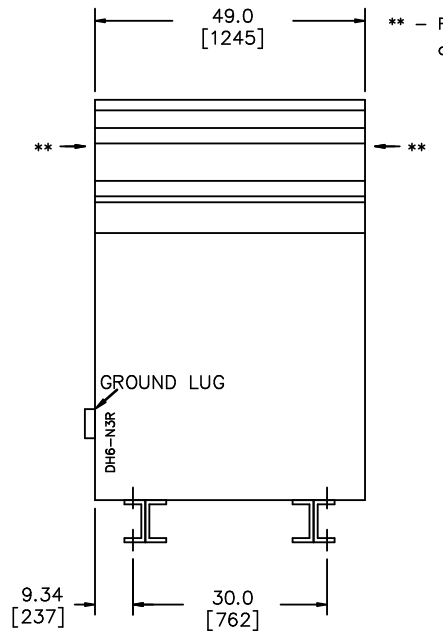

** – Recommended cable entry locations only
cutouts & gland plates not provided.

SIDE VIEW

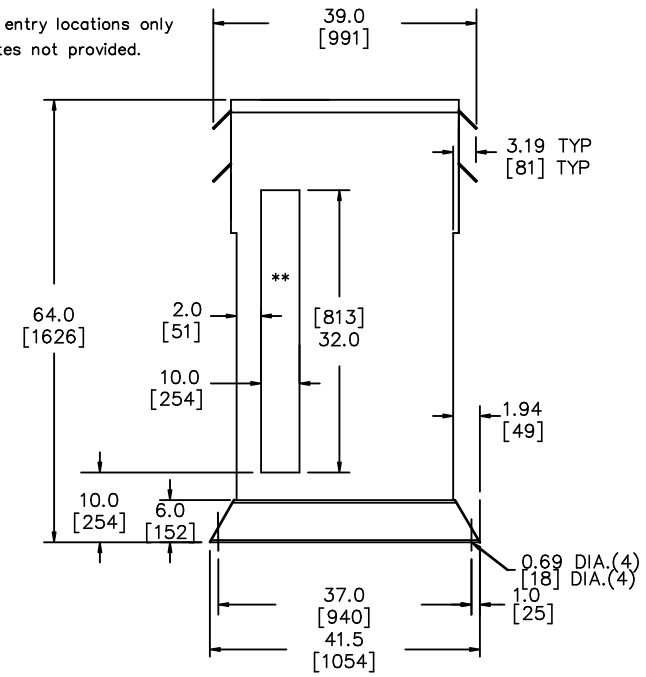

All Dimensions in inches[mm]

ENCLOSURE COLOR : ANSI 61 GREY – OUTDOOR

HV TERMINAL DETAIL

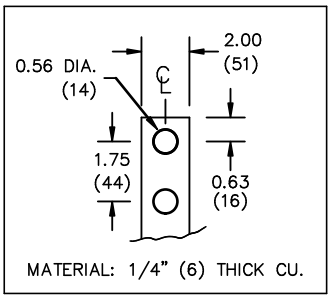

MATERIAL: 1/4" (6) THICK CU.

LV TERMINAL DETAIL

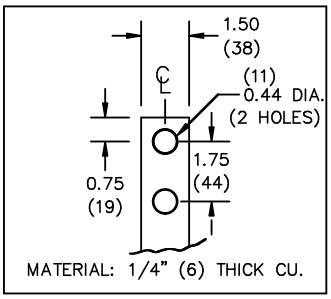

MATERIAL: 1/4" (6) THICK CU.

CUSTOMER NOTES:
- HV TERMINATED AT TOP FRONT
- LV TERMINATED AT BOTTOM FRONT
X0 TERMINATION AT TOP FRONT.

Hammond Power Solutions Inc.

TITLE: 3PH DISTRIBUTION TRANSFORMER

NO.	DATE	BY	REVISION
2	21/07/16	PP	EDB UPDATE
1	20/03/17	PP	SEISMIC UPDATE

DES: RMOVVA
DATE: 19/04/04
SCALE: NTS

SHEET 2 OF 3

EDBSG3A0500KY0C

2.0 jwen 2021/07/16 13.31

ENCLOSURE BOTTOM VIEW

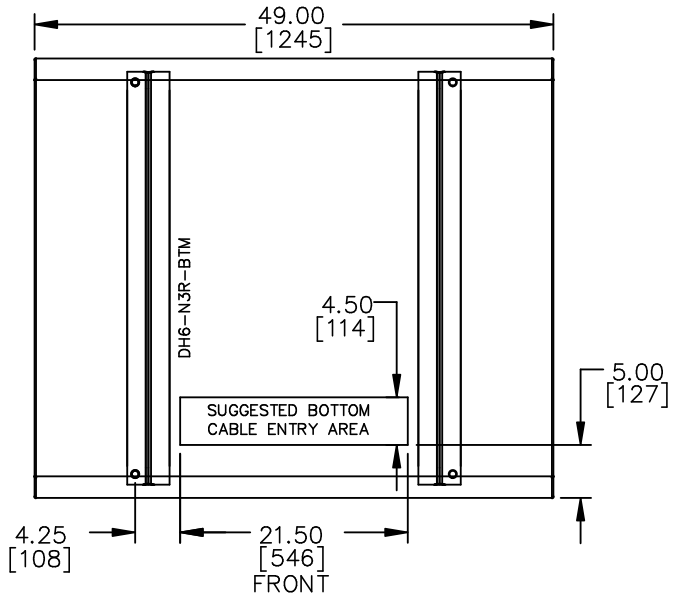

NOTE:
WHEN BOTTOM CABLE ENTRY IS OPTED, THE SPACE USED FOR CONDUITS IN THE FRONT OF THE TRANSFORMER SHOULD NOT OBSTRUCT MORE THAN 50% OF THE FRONT AIR INTAKE AREA DEFINED BETWEEN THE BOTTOM PLATE AND THE SUPPORTING LEGS.
SEE MANUAL FOR ADDITIONAL INFORMATION

Hammond Power Solutions Inc.

TITLE: 3PH DISTRIBUTION TRANSFORMER ENCLOSURE BOTTOM VIEW

NO.	DATE	BY	REVISION	
2	21/07/16	PP	EDB UPDATE	DES: RMOVVA
1	20/03/17	PP	SEISMIC UPDATE	DATE: 19/04/04
				SCALE: NTS

SHEET 3 OF 3

EDBSG3A0500KY0C

2.0 jwen 2021/07/16 13:31