hammond POWER SOLUTIONS

Energy Efficient Distribution Transformer

Transformateur de Distribution à Bon Rendement Énergétique

Hyderabad, IN | Guelph, ONT Compton, CA | Baraboo, WI Monterrey, MX

Part No. SG3A0500BB

LR 3902

DRY TYPE TRANSFORMER 77U5 E112313 LISTED

ALSO VERIFIED IN ACCORDANCE TO ENERGY STANDARD C802.2-18 BY UNDERWRITERS LABORATORIES INC. 3VJ6

8 03423 12722 0

Cust. Ref. / Ref. du Client		Serial No. / No. de Serie	
Phase	3	HV/HT	208V
Type	K	BIL	10 kV
Cooling / Refroidissement	ANN	Term / Bornes	H1 H2 H3
kVA	500	LV/BT	208Y/120V
Temp. Rise / Echauffement	150 °C	BIL	10 kV
Temp Class / Classe Temp	220 °C	Term / Bornes	X0 X1 X2 X3
Winding / Enroulement	AL	Energy Regulations	DOE 10 CFR PART 431:2016
Frequency / Frequence Hz	60	Reglements de Energetique	CEE ACT SOR/2018-201
Impedance % @ 170 °C	4.8		
Encl Type / Type De Coffrage	3R		
Weight / Poids lbs	3600		

VOLTS	CURRENT COURANT	% RATED VOLTAGE % TENSION NOMINALE	CONNECTION EACH PHASE CONNEXION PAR PHASE
218	1322	105	1-2
208	1388	100	2-3
198	1461	95	3-4

SPACINGS BETWEEN ANY VENTILATED ENCLOSURE PANEL AND ANY ADJACENT WALL SHALL BE A MINIMUM OF 12 INCHES

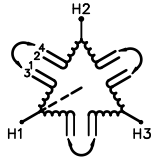

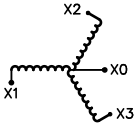

SEISMIC QUALIFICATIONS:
AS FLOOR MOUNT ONLY
IBC 2018/ASCE 7-16
SDS<=2.0g Z/h=0 Ip=1.5

d000186hb

hammond POWER SOLUTIONS

TITLE: 3PH DISTRIBUTION TRANSFORMER NAMEPLATE INFORMATION

NO.	DATE	BY	REVISION
3	21/07/16	PP	EDB UPDATE
2	20/03/17	PP	SEISMIC UPDATE

DES: RMOVVA
DATE: 16/09/13
SCALE: NTS

SHEET 1 OF 3

EDBSG3A0500BB

3.1 httpd 2026/07/12 03:23

THIS DRAWING CONTAINS STRICTLY CONFIDENTIAL INFORMATION BELONGING TO HAMMOND POWER SOLUTIONS AND MUST NOT BE DISTRIBUTED OUTSIDE AUTHORIZED PARTIES.

FRONT VIEW

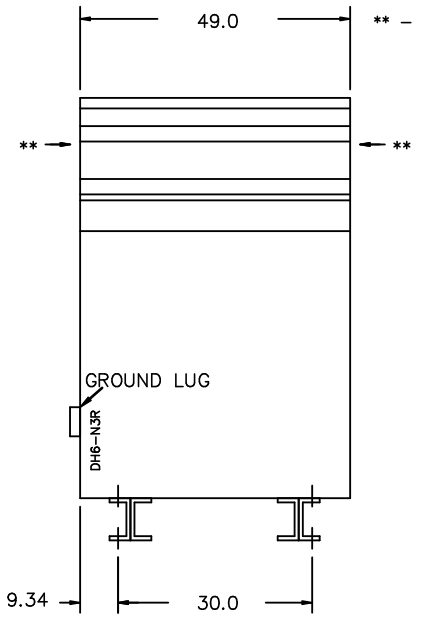

** – Recommended cable entry locations only
cutouts & gland plates not provided.

SIDE VIEW

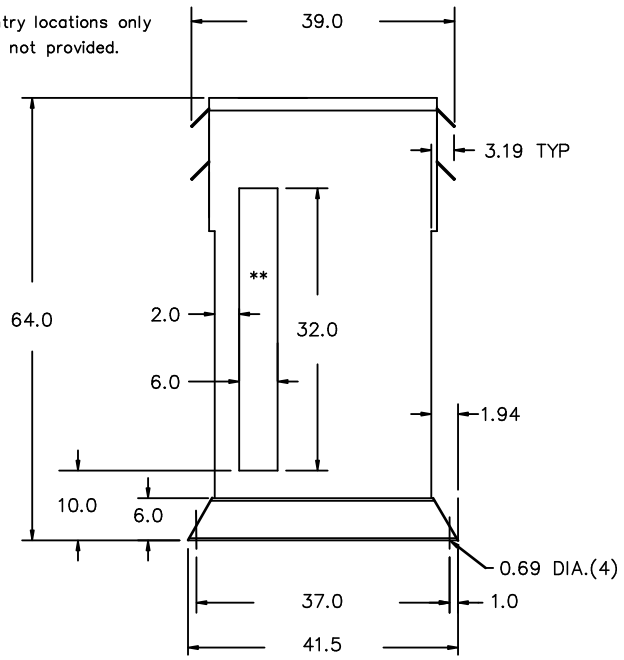

All Dimensions in inches

ENCLOSURE COLOR : ANSI 61 GREY – OUTDOOR

H.V.1. TERMINAL DETAIL

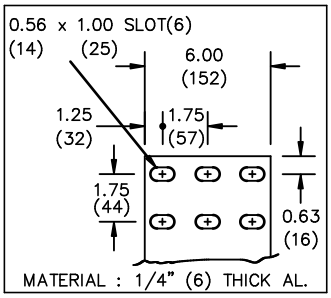

L.V.1. TERMINAL DETAIL

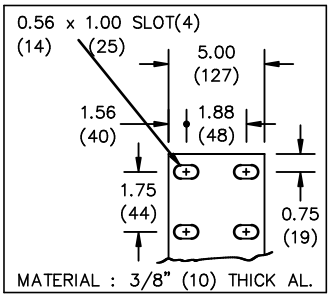

CUSTOMER NOTES:
- HV1 TERMINATED AT TOP FRONT
- LV1 TERMINATED AT BOTTOM FRONT

THIS DRAWING CONTAINS STRICTLY CONFIDENTIAL INFORMATION BELONGING TO HAMMOND POWER SOLUTIONS AND MUST NOT BE DISTRIBUTED OUTSIDE AUTHORIZED PARTIES.

hammond POWER SOLUTIONS

TITLE: 3PH DISTRIBUTION TRANSFORMER

NO.	DATE	BY	REVISION
3	21/07/16	PP	EDB UPDATE
2	20/03/17	PP	SEISMIC UPDATE

DES: RMOVVA
DATE: 16/09/13
SCALE: NTS

SHEET 2 OF 3

EDBSG3A0500BB

3.1 httpd 2026/07/12 03:23

ENCLOSURE BOTTOM VIEW

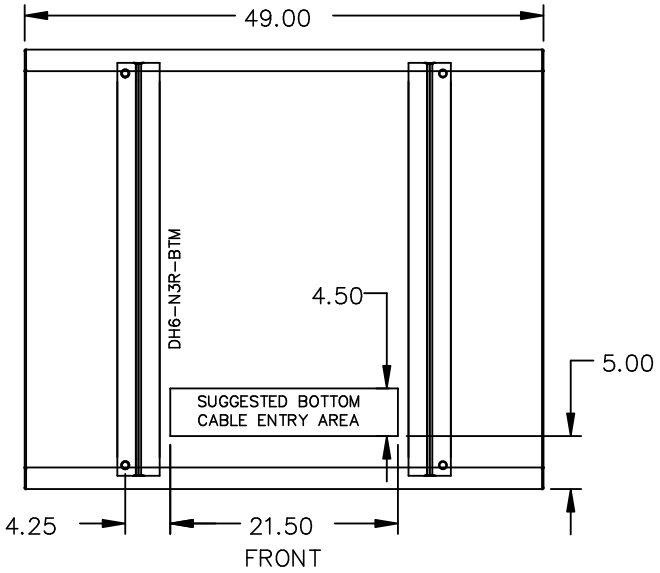

NOTE:
WHEN BOTTOM CABLE ENTRY IS OPTED, THE SPACE USED FOR CONDUITS IN THE FRONT OF THE TRANSFORMER SHOULD NOT OBSTRUCT MORE THAN 50% OF THE FRONT AIR INTAKE AREA DEFINED BETWEEN THE BOTTOM PLATE AND THE SUPPORTING LEGS.
SEE MANUAL FOR ADDITIONAL INFORMATION

hammond POWER SOLUTIONS

TITLE: 3PH DISTRIBUTION TRANSFORMER ENCLOSURE BOTTOM VIEW

NO.	DATE	BY	REVISION	
3	21/07/16	PP	EDB UPDATE	DES: RMOVVA
2	20/03/17	PP	SEISMIC UPDATE	DATE: 16/09/13
				SCALE: NTS

SHEET 3 OF 3

EDBSG3A0500BB

THIS DRAWING CONTAINS STRICTLY CONFIDENTIAL INFORMATION BELONGING TO HAMMOND POWER SOLUTIONS AND MUST NOT BE DISTRIBUTED OUTSIDE AUTHORIZED PARTIES.

3.1 httpd 2026/07/12 03:23