hammond POWER SOLUTIONS

Energy Efficient Distribution Transformer

Transformateur de Distribution à Bon Rendement Énergétique

Hyderabad, IN | Guelph, ONT Compton, CA | Baraboo, WI Monterrey, MX

Part No. SG3A0150DK0C

LR 3902

DRY TYPE TRANSFORMER 77U5 E112313 LISTED

ALSO VERIFIED IN ACCORDANCE TO ENERGY STANDARD C802.2-18 BY UNDERWRITERS LABORATORIES INC.® 3VJ6

8 03423 12776 3

Cust. Ref. / Ref. du Client		Serial No. / No. de Serie	
Phase	3	HV/HT	480Y/277V 180A
Type	K	BIL	10 kV
Cooling / Refroidissement	ANN	Term Bornes	H0 H1 H2 H3
kVA	150	LV/BT	240V 361A
Temp. Rise / Echauffement	150 °C	BIL	10 kV
Temp Class / Classe Temp	220 °C	Term Bornes	X1 X2 X3
Winding / Enroulement	CU	Energy Regulations	DOE 10 CFR PART 431:2016
Frequency / Frequence Hz	60	Reglements de Energetique	CEE ACT SOR/2018-201
Impedance % @ 170 °C	4.5		
Encl Type / Type De Coffrage	3R		
Weight / Poids lbs	950		

VOLTS	CURRENT COURANT	% RATED VOLTAGE % TENSION NOMINALE	CONNECTION EACH PHASE CONNEXION PAR PHASE
252	344	105	1
246	352	102.5	2
240	361	100	3
234	370	97.5	4
228	380	95	5
222	390	92.5	6
216	401	90	7

SPACINGS BETWEEN ANY VENTILATED ENCLOSURE PANEL AND ANY ADJACENT WALL SHALL BE A MINIMUM OF 5 INCHES EXCEPT WHEN WALL MOUNTED USING APPROVED WALL MOUNTING KIT

TRANSFORMER SUITABLE FOR STEP UP OPERATION ONLY

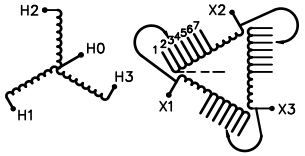

SEISMIC QUALIFICATIONS:
AS FLOOR MOUNT ONLY
IBC 2018/ASCE 7-16
SDS<=2.0g Z/h=1 Ip=1.5

d000186hb

hammond POWER SOLUTIONS

TITLE: 3PH DISTRIBUTION TRANSFORMER NAMEPLATE INFORMATION

NO.	DATE	BY	REVISION
3	21/11/25	CS	NPL IMPEDANCE AND WEIGHT UPDATE
2	21/07/16	PP	EDB UPDATE

DES: RMOVVA
DATE: 18/06/18
SCALE: NTS

SHEET 1 OF 3

EDBSG3A0150DK0C

3.0 httpd 2026/07/24 07:05

THIS DRAWING CONTAINS STRICTLY CONFIDENTIAL INFORMATION BELONGING TO HAMMOND POWER SOLUTIONS AND MUST NOT BE DISTRIBUTED OUTSIDE AUTHORIZED PARTIES.

FRONT VIEW

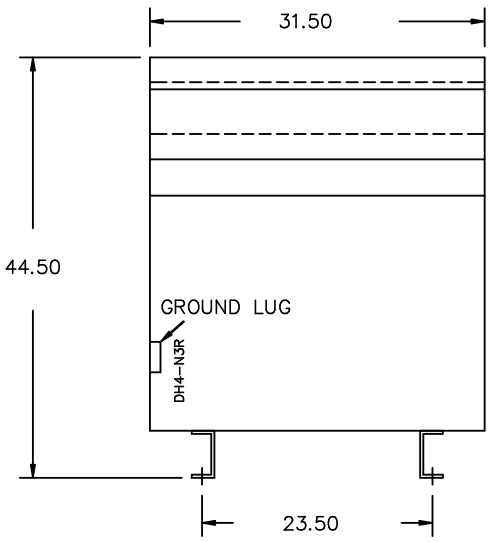

SIDE VIEW

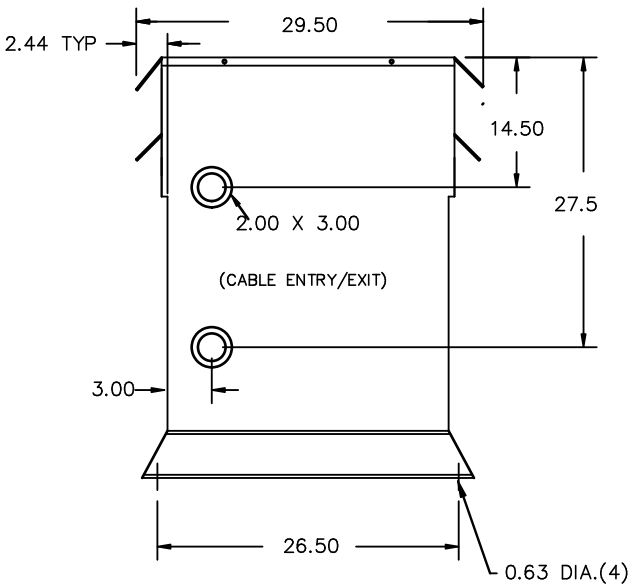

All Dimensions in inches

ENCLOSURE COLOR :ANSI 61 GREY – OUTDOOR

HV TERMINAL DETAIL

MECHANICAL TYPE LUGS INCLUDED
SUITABLE FOR 350MCM-6 CU/AL
CONDUCTORS
1 CONDUCTOR PER PHASE

LV TERMINAL DETAIL

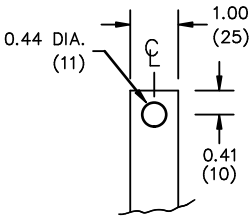

MATERIAL: 1/4" (6) THICK CU.

CUSTOMER NOTES:
- HV TERMINATED AT BOTTOM FRONT
- LV TERMINATED AT TOP FRONT

THIS DRAWING CONTAINS STRICTLY CONFIDENTIAL INFORMATION BELONGING TO HAMMOND POWER SOLUTIONS AND MUST NOT BE DISTRIBUTED OUTSIDE AUTHORIZED PARTIES.

hammond POWER SOLUTIONS

TITLE: 3PH DISTRIBUTION TRANSFORMER

NO.	DATE	BY	REVISION
3	21/11/25	CS	NPL IMPEDANCE AND WEIGHT UPDATE
2	21/07/16	PP	EDB UPDATE

DES: RMOVVA
DATE: 18/06/18
SCALE: NTS

SHEET 2 OF 3

EDBSG3A0150DK0C

3.0 Hitpd 2026/07/24 07:05

ENCLOSURE BOTTOM VIEW

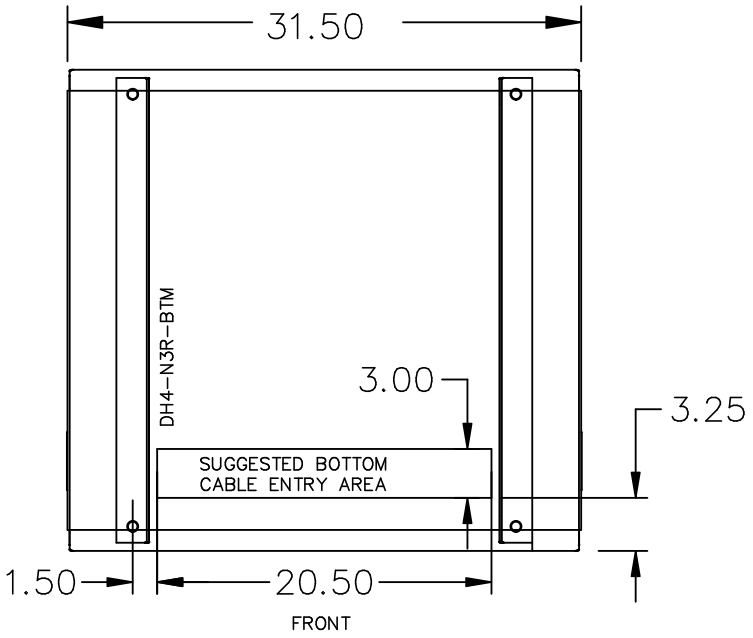

NOTE:
WHEN BOTTOM CABLE ENTRY IS OPTED, THE SPACE USED FOR CONDUITS IN THE FRONT OF THE TRANSFORMER SHOULD NOT OBSTRUCT MORE THAN 50% OF THE FRONT AIR INTAKE AREA DEFINED BETWEEN THE BOTTOM PLATE AND THE SUPPORTING LEGS.
SEE MANUAL FOR ADDITIONAL INFORMATION

THIS DRAWING CONTAINS STRICTLY CONFIDENTIAL INFORMATION BELONGING TO HAMMOND POWER SOLUTIONS AND MUST NOT BE DISTRIBUTED OUTSIDE AUTHORIZED PARTIES.

hammond POWER SOLUTIONS

TITLE: 3PH DISTRIBUTION TRANSFORMER ENCLOSURE BOTTOM VIEW

NO.	DATE	BY	REVISION
3	21/11/25	CS	NPL IMPEDANCE AND WEIGHT UPDATE
2	21/07/16	PP	EDB UPDATE

DES: RMOVVA
DATE: 18/06/18
SCALE: NTS

SHEET 3 OF 3

EDBSG3A015DK0C

3.0 Hitpd 2026/07/24 07:05