hammond POWER SOLUTIONS

Energy Efficient
General Purpose Distribution Transformer
Transformateur de Distribution
à usage général économe en énergie

Hyderabad, IN | Guelph, ONT Compton, CA | Baraboo, WI Monterrey, MX

Part No. SG3A0112BB0C

LR 3902
DRY TYPE TRANSFORMER 77U5 E112313 LISTED

8 03423 12729 9

Cust. Ref. / Ref. du Client		Serial No. / No. de Serie	
Phase	3	HV/HT	208V
Type	K	BIL	10 kV
Cooling / Refroidissement	ANN	Term / Bornes	H1 H2 H3
kVA	112.5	LV/BT	208Y/120V
Temp. Rise / Echauffement	150 °C	BIL	10 kV
Temp Class / Classe Temp	220 °C	Term / Bornes	X0 X1 X2 X3
Winding / Enroulement	CU	Energy Regulations	DOE 10 CFR PART 431:2016
Frequency / Frequence Hz	60	Reglements de Energetique	
Impedance % @ 170 °C	3.9		
Encl Type / Type De Coffrage	3R		
Weight / Poids lbs/kg	812/369		

VOLTS	CURRENT COURANT	% RATED VOLTAGE % TENSION NOMINALE	CONNECTION EACH PHASE CONNEXION PAR PHASE
218	297	105	1
213	305	102.5	2
208	312	100	3
203	320	97.5	4
198	329	95	5
192	338	92.5	6
187	347	90	7

SPACINGS BETWEEN ANY VENTILATED ENCLOSURE PANEL AND ANY ADJACENT WALL SHALL BE A MINIMUM OF 5 INCHES EXCEPT WHEN WALL MOUNTED USING APPROVED WALL MOUNTING KIT

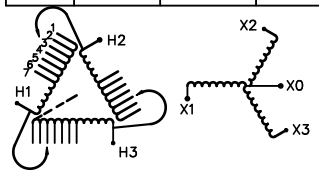

SEISMIC QUALIFICATIONS:
AS FLOOR MOUNT ONLY
IBC 2018/ASCE 7-16
SDS<=2.0g Z/h=1 Ip=1.5

d000186hb

hammond POWER SOLUTIONS

TITLE: 3PH DISTRIBUTION TRANSFORMER NAMEPLATE INFORMATION

NO.	DATE	BY	REVISION
4	22/08/04	LC	CHANGED NPL VER:
3	21/07/16	PP	EDB UPDATE

DES: GPATEL
DATE: 16/02/23
SCALE: NTS

SHEET 1 OF 3

EDBSG3A0112BB0C

4.0 httpd 2026/09/12 05:17

THIS DRAWING CONTAINS STRICTLY CONFIDENTIAL INFORMATION BELONGING TO HAMMOND POWER SOLUTIONS AND MUST NOT BE DISTRIBUTED OUTSIDE AUTHORIZED PARTIES.

FRONT VIEW

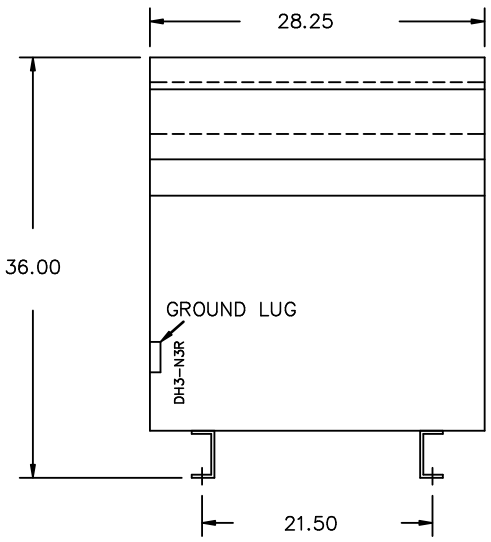

SIDE VIEW

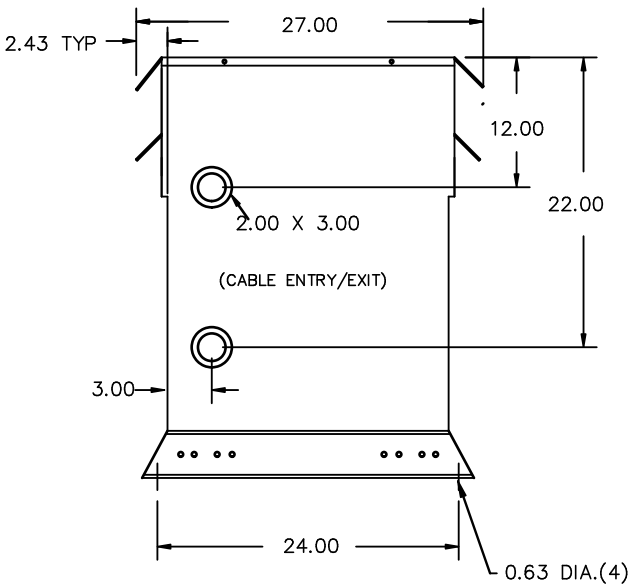

All Dimensions in inches

ENCLOSURE COLOR :ANSI 61 GREY – OUTDOOR

H.V.1. TERMINAL DETAIL

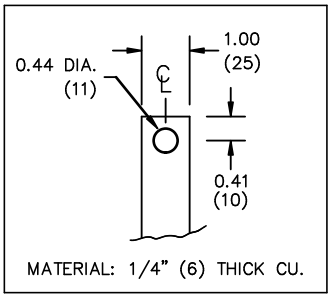

MATERIAL: 1/4" (6) THICK CU.

L.V.1. TERMINAL DETAIL

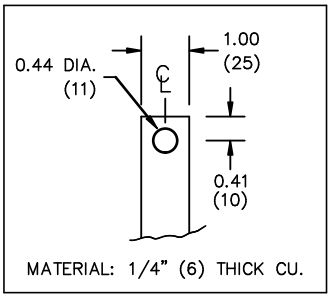

MATERIAL: 1/4" (6) THICK CU.

CUSTOMER NOTES:
- HV1 TERMINATED AT TOP FRONT
- LV1 TERMINATED AT BOTTOM FRONT

THIS DRAWING CONTAINS STRICTLY CONFIDENTIAL INFORMATION BELONGING TO HAMMOND POWER SOLUTIONS AND MUST NOT BE DISTRIBUTED OUTSIDE AUTHORIZED PARTIES.

hammond POWER SOLUTIONS

TITLE: 3PH DISTRIBUTION TRANSFORMER

NO.	DATE	BY	REVISION
4	22/08/04	LC	CHANGED NPL VER:
3	21/07/16	PP	EDB UPDATE

DES: GPATEL
DATE: 16/02/23
SCALE: NTS

SHEET 2 OF 3

EDBSG3A0112BB0C

4.0 httpd 2026/09/12 05:17

ENCLOSURE BOTTOM VIEW

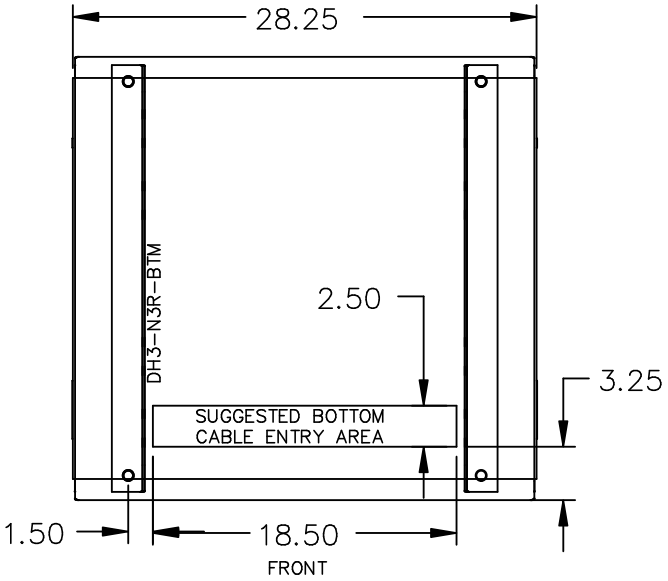

NOTE:
WHEN BOTTOM CABLE ENTRY IS OPTED, THE SPACE USED FOR CONDUITS IN THE FRONT OF THE TRANSFORMER SHOULD NOT OBSTRUCT MORE THAN 50% OF THE FRONT AIR INTAKE AREA DEFINED BETWEEN THE BOTTOM PLATE AND THE SUPPORTING LEGS.
SEE MANUAL FOR ADDITIONAL INFORMATION

THIS DRAWING CONTAINS STRICTLY CONFIDENTIAL INFORMATION BELONGING TO HAMMOND POWER SOLUTIONS AND MUST NOT BE DISTRIBUTED OUTSIDE AUTHORIZED PARTIES.

hammond POWER SOLUTIONS

TITLE: 3PH DISTRIBUTION TRANSFORMER ENCLOSURE BOTTOM VIEW

NO.	DATE	BY	REVISION
4	22/08/04	LC	CHANGED NPL VER:
3	21/07/16	PP	EDB UPDATE

DES: GPATEL
DATE: 16/02/23
SCALE: NTS

SHEET 3 OF 3

EDBSG3A0112BB0C

4.0 Hitpd 2026/09/12 05:17