HPS Sentinel™ G

Energy Efficient Distribution Transformer

Transformateur de Distribution à Bon Rendement Énergétique

Hammond Power Solutions

Guelph, ONT
Compton, CA

Baraboo, WI
Monterrey, MX

Part No. SG3A0075PK

LR 3902

DRY TYPE TRANSFORMER
77U5
E112313
LISTED

8 03423 12596 7

ALSO VERIFIED IN ACCORDANCE TO ENERGY STANDARD C802.2-18 BY UNDERWRITERS LABORATORIES INC. 3VJ6

Cust. Ref. / Ref. du Client		Serial No. / No. de Serie	
Phase	3	HV/HT	600V
Type	K	BIL	10 kV
Cooling / Refroidissement	ANN	Term / Bornes	H1 H2 H3
kVA	75	LV/BT	480Y/277V
Temp. Rise / Echauffement	150 °C	BIL	10 kV
Temp Class / Classe Temp	220 °C	Term / Bornes	X0 X1 X2 X3
Winding / Enroulement	AL	Energy Regulations	DOE 10 CFR PART 431:2016
Frequency / Frequence Hz	60	Reglements de Energetique	CEE ACT SOR/2018-201
Impedance % @ 170 °C	5.3		
Encl Type / Type De Coffrage	3R		
Weight / Poids lbs/kg	545/248		

VOLTS	CURRENT COURANT	% RATED VOLTAGE % TENSION NOMINALE	CONNECTION EACH PHASE CONNEXION PAR PHASE
630	68.7	105	1
615	70.4	102.5	2
600	72.2	100	3
585	74.0	97.5	4
570	76.0	95	5
555	78.0	92.5	6
540	80.2	90	7

SPACINGS BETWEEN ANY VENTILATED ENCLOSURE PANEL AND ANY ADJACENT WALL SHALL BE A MINIMUM OF 5 INCHES EXCEPT WHEN WALL MOUNTED USING APPROVED WALL MOUNTING KIT

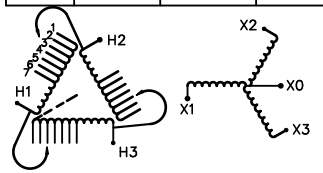

SEISMIC QUALIFICATIONS:
AS FLOOR MOUNT ONLY
IBC 2018/ASCE 7-16
SDS<=2.0g Z/h=1 Ip=1.5

d000186hb

Hammond Power Solutions Inc.

TITLE: 3PH DISTRIBUTION TRANSFORMER NAMEPLATE INFORMATION

NO.	DATE	BY	REVISION
4	21/11/25	CS	NPL IMPEDANCE AND WEIGHT UPDATE
3	21/07/16	PP	EDB UPDATE

DES: JWEN
DATE: 15/11/09
SCALE: NTS

SHEET 1 OF 3

EDBSG3A0075PK

4.0 jwen 2021/11/25 14:23

FRONT VIEW

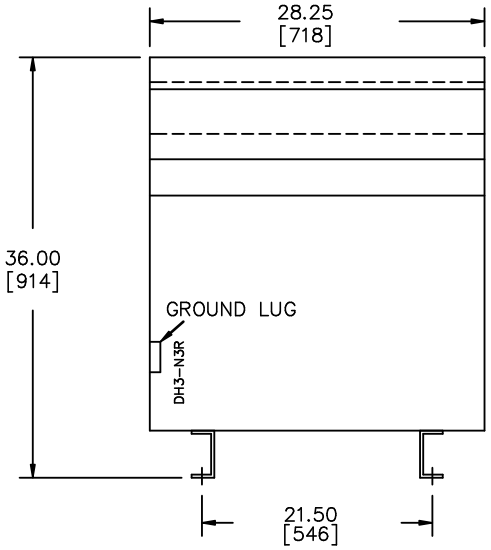

SIDE VIEW

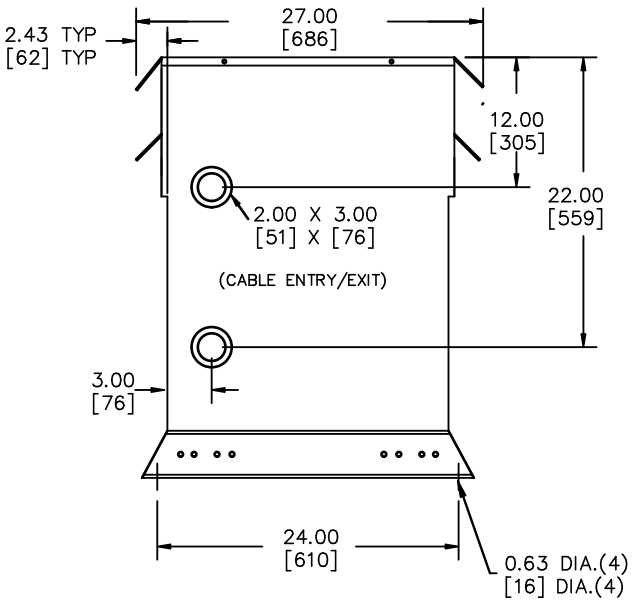

All Dimensions in inches[mm]

ENCLOSURE COLOR :ANSI 61 GREY – OUTDOOR

H.V.1. TERMINAL DETAIL

MECHANICAL TYPE LUGS INCLUDED
SUITABLE FOR #2/0–14 CU/AL
CONDUCTORS
1 CONDUCTOR PER PHASE

L.V.1. TERMINAL DETAIL

MECHANICAL TYPE LUGS INCLUDED
SUITABLE FOR #2/0–14 CU/AL
CONDUCTORS
1 CONDUCTOR PER PHASE

CUSTOMER NOTES:
- HV1 TERMINATED AT TOP FRONT
- LV1 TERMINATED AT BOTTOM FRONT

Hammond Power Solutions Inc.

TITLE: 3PH DISTRIBUTION TRANSFORMER

NO.	DATE	BY	REVISION
4	21/11/25	CS	NPL IMPEDANCE AND WEIGHT UPDATE
3	21/07/16	PP	EDB UPDATE

DES: JWEN
DATE: 15/11/09
SCALE: NTS

SHEET 2 OF 3

EDBSG3A0075PK

4.0 jwen 2021/11/25 14:23

ENCLOSURE BOTTOM VIEW

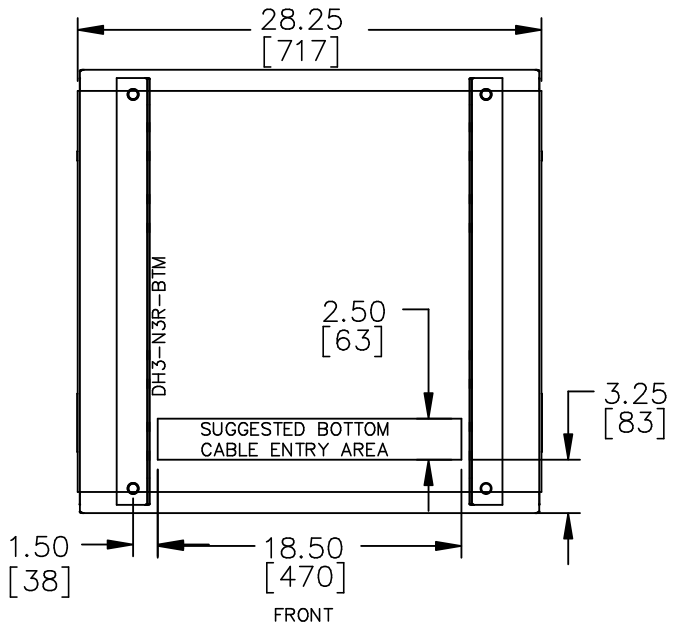

NOTE:
WHEN BOTTOM CABLE ENTRY IS OPTED, THE SPACE USED FOR CONDUITS IN THE FRONT OF THE TRANSFORMER SHOULD NOT OBSTRUCT MORE THAN 50% OF THE FRONT AIR INTAKE AREA DEFINED BETWEEN THE BOTTOM PLATE AND THE SUPPORTING LEGS.
SEE MANUAL FOR ADDITIONAL INFORMATION

Hammond Power Solutions Inc.

TITLE: 3PH DISTRIBUTION TRANSFORMER ENCLOSURE BOTTOM VIEW

NO.	DATE	BY	REVISION	
4	21/11/25	CS	NPL IMPEDANCE AND WEIGHT UPDATE	DES: JWEN
3	21/07/16	PP	EDB UPDATE	DATE: 15/11/09
				SCALE: NTS

SHEET 3 OF 3

EDBSG3A0075PK

4.0 jwen 2021/11/25 14:23