HPS Sentinel™ G

Energy Efficient Distribution Transformer

Transformateur de Distribution à Bon Rendement Énergétique

Hammond Power Solutions

Guelph, ONT
Compton, CA

Baraboo, WI
Monterrey, MX

Part No. SG3A0030KY

LR 3902

DRY TYPE TRANSFORMER
77U5
E112313
LISTED

8 03423 12794 7

ALSO VERIFIED IN ACCORDANCE TO ENERGY STANDARD C802.2-18 BY UNDERWRITERS LABORATORIES INC. 3VJ6

Cust. Ref. / Ref. du Client		Serial No. / No. de Serie	
Phase	3	HV/HT	480V 36.1A
Type	K	BIL	10 kV
Cooling / Refroidissement	ANN	Term / Bornes	H1 H2 H3
kVA	30	LV/BT	400Y/231V 43.3A
Temp. Rise / Echauffement	150 °C	BIL	10 kV
Temp Class / Classe Temp	220 °C	Term / Bornes	X0 X1 X2 X3
Winding / Enroulement	AL	Energy Regulations	DOE 10 CFR PART 431:2016
Frequency / Frequence Hz	60	Reglements de Energetique	CEE ACT SOR/2018-201
Impedance % @ 170 °C	3.9		
Encl Type / Type De Coffrage	3R		
Weight / Poids lbs/kg	340/155		

VOLTS	CURRENT COURANT	% RATED VOLTAGE % TENSION NOMINALE	CONNECTION EACH PHASE CONNEXION PAR PHASE
504	34.4	105	1
492	35.2	102.5	2
480	36.1	100	3
468	37.0	97.5	4
456	38.0	95	5
444	39.0	92.5	6
432	40.1	90	7
430	40.3	107.5	A
416	41.6	104	B
400	43.3	100	C
380	45.6	95	D

SPACINGS BETWEEN ANY VENTILATED ENCLOSURE PANEL AND ANY ADJACENT WALL SHALL BE A MINIMUM OF 3 INCHES

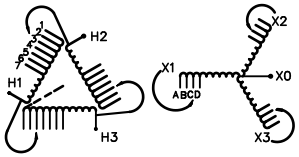

SEISMIC QUALIFICATIONS:
OSP-0136-10/IBC 2018/ASCE 7-16
SDS<=2.0g Z/h=1 Ip=1.5

d0001986b

Hammond Power Solutions Inc.

TITLE: 3PH DISTRIBUTION TRANSFORMER NAMEPLATE INFORMATION

NO.	DATE	BY	REVISION
3	21/07/16	PP	EDB UPDATE
2	20/03/17	PP	SEISMIC UPDATE

DES: RMOVVA
DATE: 16/02/10
SCALE: NTS

SHEET 1 OF 3

EDBSG3A0030KY

3.0 jwen 2021/07/16 13:00

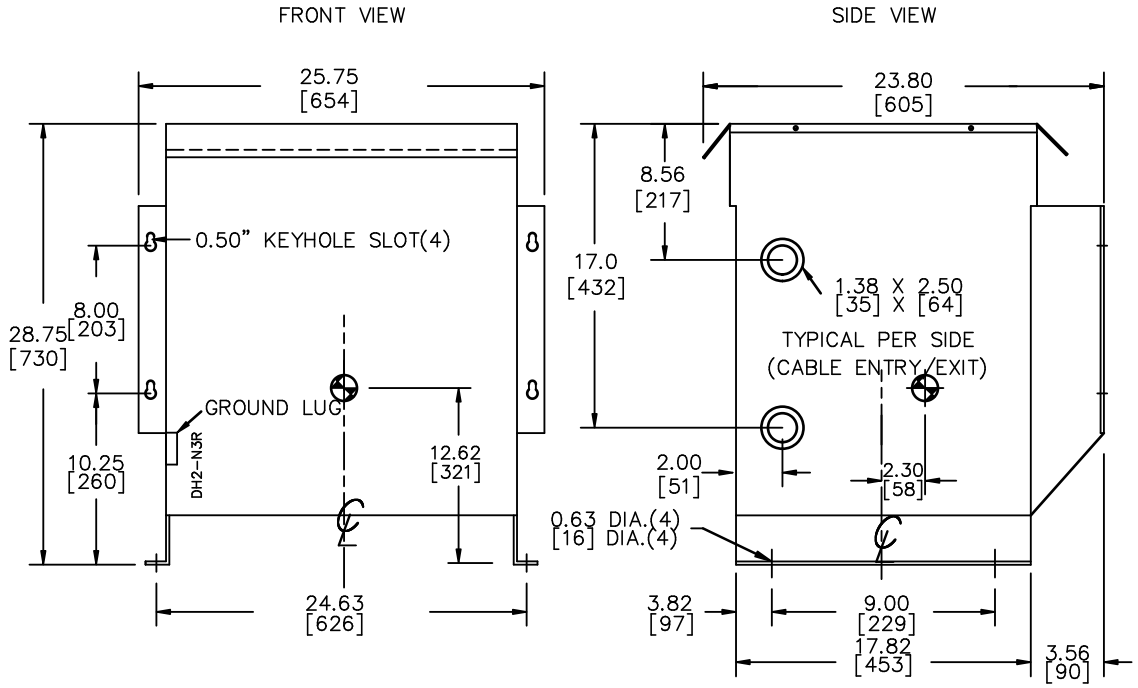

All Dimensions in inches[mm]

ENCLOSURE COLOR : ANSI 61 GREY – OUTDOOR

HV TERMINAL DETAIL

MECHANICAL TYPE LUGS INCLUDED
SUITABLE FOR #14–2 CU/AL
CONDUCTORS
1 CONDUCTOR PER PHASE

LV TERMINAL DETAIL

MECHANICAL TYPE LUGS INCLUDED
SUITABLE FOR #14–2 CU/AL
CONDUCTORS
1 CONDUCTOR PER PHASE

CUSTOMER NOTES:

- HV TERMINATED AT TOP FRONT
- LV TERMINATED AT BOTTOM FRONT

Hammond Power Solutions Inc.

TITLE: 3PH DISTRIBUTION TRANSFORMER

NO.	DATE	BY	REVISION
3	21/07/16	PP	EDB UPDATE
2	20/03/17	PP	SEISMIC UPDATE

DES: RMOVVA
DATE: 16/02/10
SCALE: NTS

SHEET 2 OF 3

EDBSG3A0030KY

3.0 jwen 2021/07/16 13:00

ENCLOSURE BOTTOM VIEW

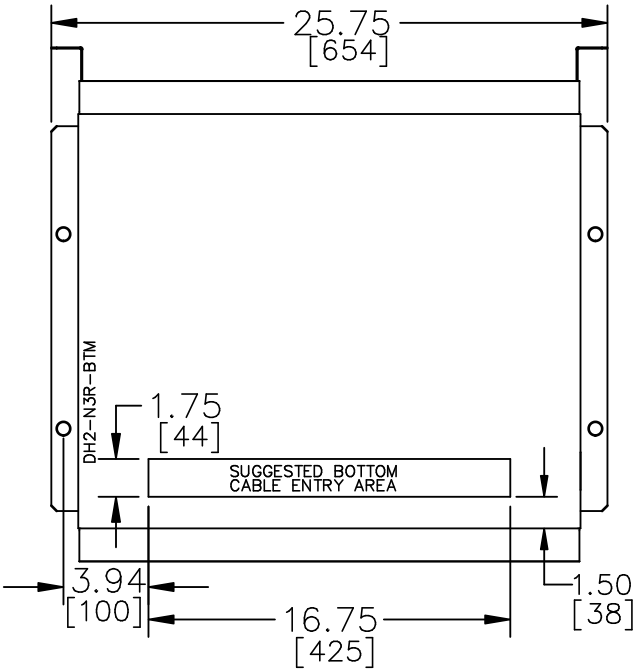

NOTE:
WHEN BOTTOM CABLE ENTRY IS OPTED, THE SPACE USED FOR CONDUITS IN THE FRONT OF THE TRANSFORMER SHOULD NOT OBSTRUCT MORE THAN 50% OF THE FRONT AIR INTAKE AREA DEFINED BETWEEN THE BOTTOM PLATE AND THE SUPPORTING LEGS.
SEE MANUAL FOR ADDITIONAL INFORMATION

Hammond Power Solutions Inc.

TITLE: 3PH DISTRIBUTION TRANSFORMER ENCLOSURE BOTTOM VIEW

NO.	DATE	BY	REVISION	
3	21/07/16	PP	EDB UPDATE	DES: RMOVVA
2	20/03/17	PP	SEISMIC UPDATE	DATE: 16/02/10
				SCALE: NTS

SHEET 3 OF 3

EDBSG3A0030KY

3.0 jwen 2021/07/16 13:00