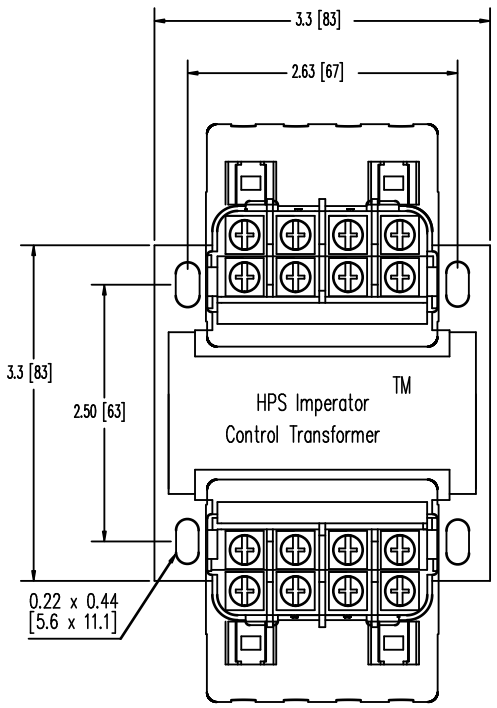

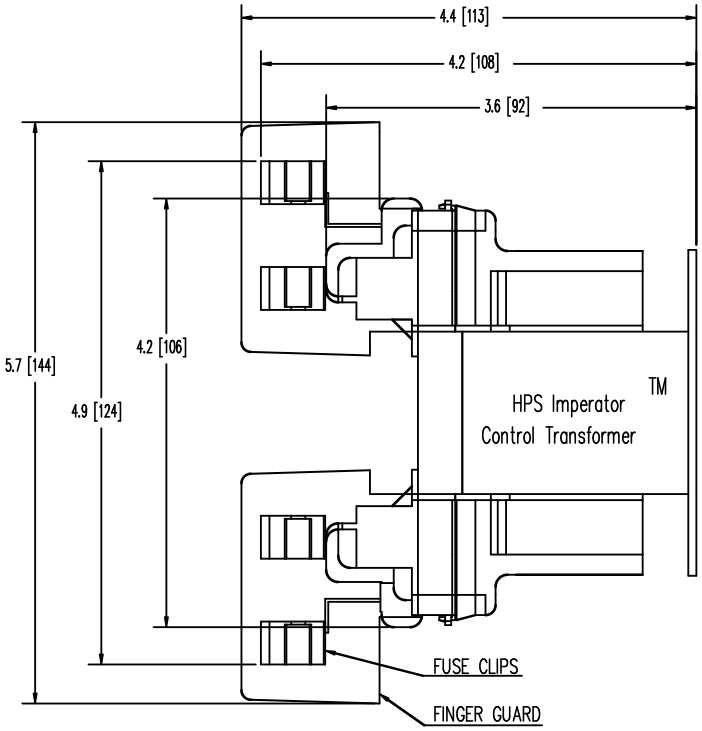

* TOLERANCES STD. + /- 0.1 INCHES[+/- 3 MM]
* ALL DIMENSIONS IN INCHES[MM]

* SECONDARY FUSE CLIPS ARE SUPPLIED LOOSE WITH TRANSFORMER
* PRIMARY FUSE CLIPS ARE OPTIONAL
* PRIMARY AND SECONDARY FINGER GUARD ARE OPTIONAL

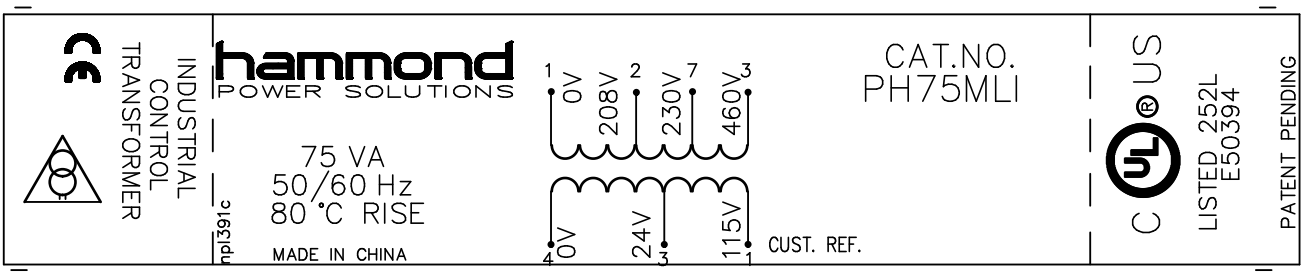

NOTES:

THIS DRAWING CONTAINS STRICKLY CONFIDENTIAL INFORMATION BELONGING TO HAMMOND POWER SOLUTIONS AND MUST NOT BE DISTRIBUTED OUTSIDE AUTHORIZED PARTIES.

hammond POWER SOLUTIONS

TITLE: IMPERATOR CONTROL TRANSFORMER

NO.	DATE	BY	REVISION

DES: WWONG
DATE: 07/06/18
SCALE: NTS

SHEET 1 OF 1

EDB PH75MLI

0.1 httpd 2026/04/01 12:11