hammond POWER SOLUTIONS

Distribution Transformer
Transformateur de Distribution

Hyderabad, IN | Guelph, ONT Compton, CA | Baraboo, WI Monterrey, MX

Part No. MG3A1250SKSCHC0

LR 3902

DISTRIBUTION TRANSFORMER 56Y1 E147879 LISTED

8 03423 13459 4

ALSO VERIFIED IN ACCORDANCE TO ENERGY STANDARD C802.2-18 BY UNDERWRITERS LABORATORIES INC. 3VJ6

Cust. Ref. / Ref. du Client		Serial No. / No. de Serie	
Phase	3	HV/HT	4160V 173A
Type	K	BIL	30 kV
Cooling / Refroidissement	ANN	Term / Bornes	H1 H2 H3
kVA	1250	LV/BT	480Y/277V 1504A
Temp. Rise / Echauffement	150 °C	BIL	10 kV
Temp Class / Classe Temp	220°C	Term / Bornes	X0 X1 X2 X3
Winding / Enroulement	CU	Energy Regulations	DOE 10 CFR PART 431:2016
Frequency / Frequence Hz	60	Reglements de Energetique	CEE ACT SOR/2018-201
Impedance % @ 170 °C	5.6		
Encl. Type/Category / Type ou categorie de boîtier	3R C		
Weight / Poids lbs	6900		

VOLTS	CURRENT COURANT	% RATED VOLTAGE % TENSION NOMINALE	CONNECTION EACH PHASE CONNEXION PAR PHASE
4368	165	105	1–2
4264	169	102.5	2–3
4160	173	100	3–4
4056	178	97.5	4–5
3952	183	95	5–6

SPACINGS BETWEEN ANY VENTILATED ENCLOSURE PANEL AND ANY ADJACENT WALL SHALL BE A MINIMUM OF 12 INCHES
ESPACEMENTS ENTRE LES PANNEAUX DE BOÎTIER VENTILÉ ET LES MURS ADJACENT DOIVENT ÊTRE UN MINIMUM DE 12 POUNCES

SEISMIC QUALIFICATIONS, FLOOR MOUNT ONLY
QUALIFICATIONS SISIQUES, MONTAGE AU SOL SEULEMENT
OSP-0136-10 IBC 2012/ASCE 7-10
SDS<=2.0G Z/H=1 IP=1.5

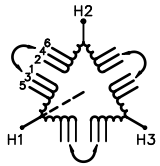

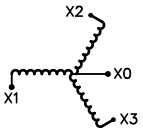

d0005906b

– IMPEDANCE SHOWN IS CALCULATED VALUE – NOT GUARANTEED

hammond POWER SOLUTIONS

TITLE: 3PH POWER TRANSFORMER NAMEPLATE INFORMATION

NO.	DATE	BY	REVISION
4	21/07/16	PP	EDB UPDATE
3	20/08/14	KP	ADDED SHEET 3 FOR BOTTOM CABLE ENTRY

SCALE: NTS | DATE: 20/01/24 | DES: SPATEL

SHEET 1 OF 3

EDB MG3A1250SKSCHC0

4.0 httpd 2026/07/24 08:08

THIS DRAWING CONTAINS STRICTLY CONFIDENTIAL INFORMATION BELONGING TO HAMMOND POWER SOLUTIONS AND MUST NOT BE DISTRIBUTED OUTSIDE AUTHORIZED PARTIES.

FRONT VIEW

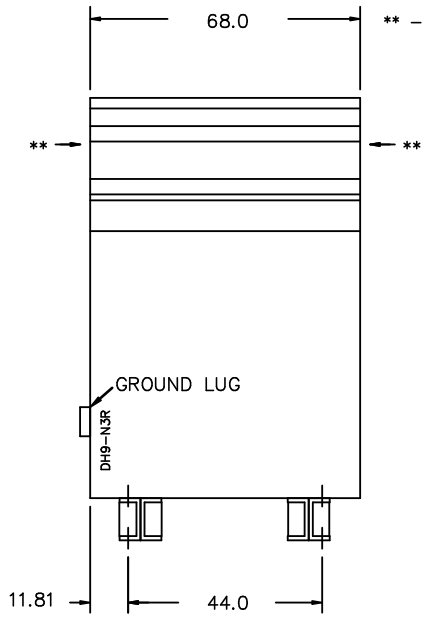

SIDE VIEW

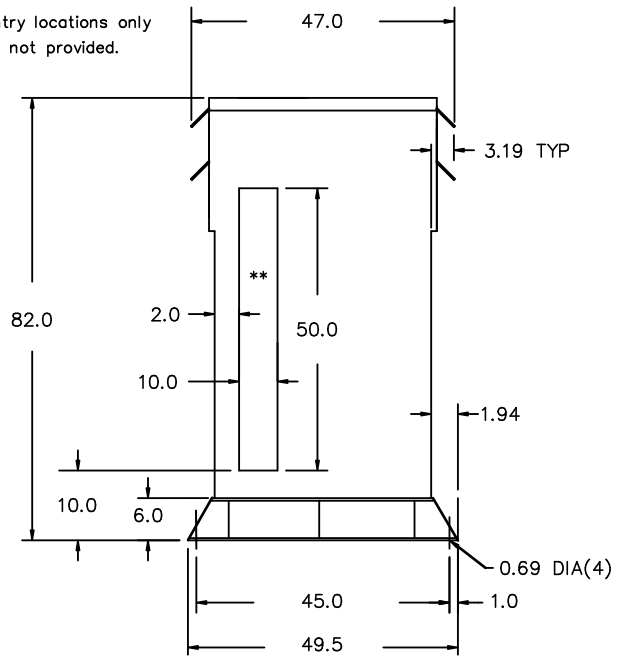

All Dimensions in inches

ENCLOSURE COLOR : ANSI 61 GREY – OUTDOOR

H.V.1. TERMINAL DETAIL

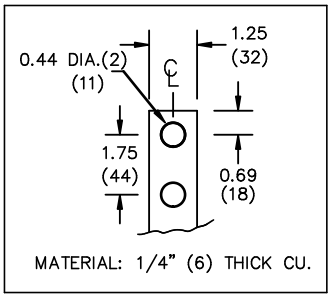

L.V.1. TERMINAL DETAIL

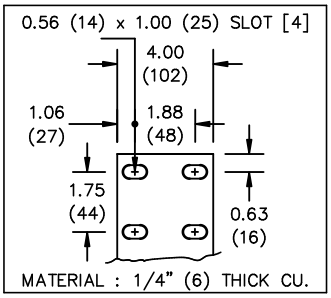

CUSTOMER NOTES:
- HV1 TERMINATED AT TOP FRONT
- LV1 TERMINATED AT BOTTOM FRONT

THIS DRAWING CONTAINS STRICTLY CONFIDENTIAL INFORMATION BELONGING TO HAMMOND POWER SOLUTIONS AND MUST NOT BE DISTRIBUTED OUTSIDE AUTHORIZED PARTIES.

hammond POWER SOLUTIONS

TITLE: 3PH POWER TRANSFORMER MECHANICAL DETAILS

NO.	DATE	BY	REVISION
4	21/07/16	PP	EDB UPDATE
3	20/08/14	KP	ADDED SHEET 3 FOR BOTTOM CABLE ENTRY

DES: SPATEL
DATE: 20/01/24
SCALE: NTS

SHEET 2 OF 3

EDBMG3A1250SKSCHCO

4.0 http2 2026/07/24 08:08

ENCLOSURE BOTTOM VIEW

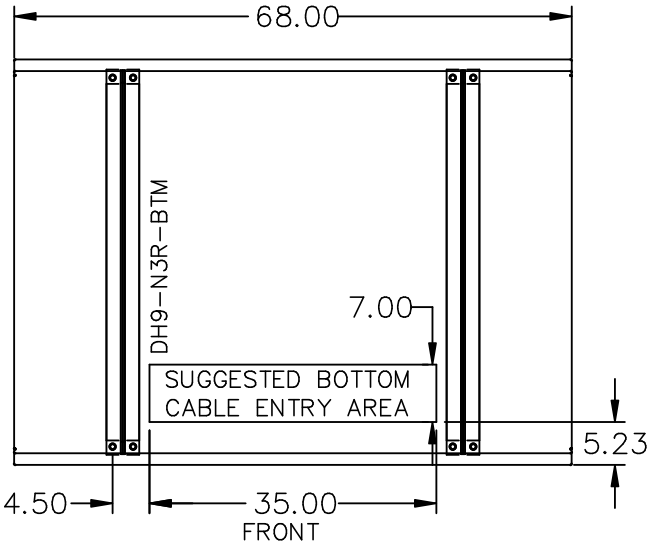

NOTE:
WHEN BOTTOM CABLE ENTRY IS OPTED, THE SPACE USED FOR CONDUITS IN THE FRONT OF THE TRANSFORMER SHOULD NOT OBSTRUCT MORE THAN 50% OF THE FRONT AIR INTAKE AREA DEFINED BETWEEN THE BOTTOM PLATE AND THE SUPPORTING LEGS.
SEE MANUAL FOR ADDITIONAL INFORMATION

THIS DRAWING CONTAINS STRICTLY CONFIDENTIAL INFORMATION BELONGING TO HAMMOND POWER SOLUTIONS AND MUST NOT BE DISTRIBUTED OUTSIDE AUTHORIZED PARTIES.

hammond POWER SOLUTIONS

TITLE: 3PH POWER TRANSFORMER ENCLOSURE BOTTOM CABLE ENTRY

NO.	DATE	BY	REVISION
4	21/07/16	PP	EDB UPDATE
3	20/08/14	KP	ADDED SHEET 3 FOR BOTTOM CABLE ENTRY

DES: SPATEL
DATE: 20/01/24
SCALE: NTS

SHEET 3 OF 3

EDBMG3A1250KSCHCO

4.0 Hitpd 2026/07/24 08:08