hammond POWER SOLUTIONS

Distribution Transformer
Transformateur de Distribution

Hyderabad, IN | Guelph, ONT Compton, CA | Baraboo, WI Monterrey, MX

Part No. MG3A1000SKSCHC0

LR 3902

DISTRIBUTION TRANSFORMER 56Y1 E147879 LISTED

8 03423 13458 7

ALSO VERIFIED IN ACCORDANCE TO ENERGY STANDARD C802.2-18 BY UNDERWRITERS LABORATORIES INC. 3VJ6

Cust. Ref. / Ref. du Client	–	Serial No. / No. de Serie	
Phase	3	HV/HT	4160V 139A
Type	K	BIL	30 kV
Cooling / Refroidissement	ANN	Term / Bornes	H1 H2 H3
kVA	1000	LV/BT	480Y/277V 1203A
Temp. Rise / Echauffement	150 °C	BIL	10 kV
Temp Class / Classe Temp	220°C	Term / Bornes	X0 X1 X2 X3
Winding / Enroulement	CU	Energy Regulations	DOE 10 CFR PART 431:2016
Frequency / Frequence Hz	60	Reglements de Energetique	CEE ACT SOR/2018-201
Impedance % @ 170 °C	5.4		
Encl. Type/Category / Type ou categorie de boîtier	3R C		
Weight / Poids lbs	5650		

VOLTS	CURRENT COURANT	% RATED VOLTAGE % TENSION NOMINALE	CONNECTION EACH PHASE CONNEXION PAR PHASE
4368	132	105	1–2
4264	135	102.5	2–3
4160	139	100	3–4
4056	142	97.5	4–5
3952	146	95	5–6

SPACINGS BETWEEN ANY VENTILATED ENCLOSURE PANEL AND ANY ADJACENT WALL SHALL BE A MINIMUM OF 12 INCHES

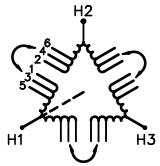

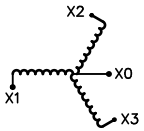

SEISMIC QUALIFICATIONS, AS FLOOR MOUNT ONLY
QUALIFICATIONS SISIQUES, COMME MONTAGE AU SOL SEULEMENT
IBC 2018/ASCE 7-16
SDS<=2.0g Z/h=0 Ip=1.5

d0005906

hammond POWER SOLUTIONS

TITLE: 3PH DISTRIBUTION TRANSFORMER NAMEPLATE INFORMATION

NO.	DATE	BY	REVISION
2	21/07/16	PP	EDB UPDATE
1	20/03/17	PP	SEISMIC UPDATE

DES: MABDELAT
DATE: 19/02/19
SCALE: NTS

SHEET 1 OF 3

EDBMG3A1000SKSCHC0

2.0 httpd 2026/07/24 08:08

THIS DRAWING CONTAINS STRICTLY CONFIDENTIAL INFORMATION BELONGING TO HAMMOND POWER SOLUTIONS AND MUST NOT BE DISTRIBUTED OUTSIDE AUTHORIZED PARTIES.

FRONT VIEW

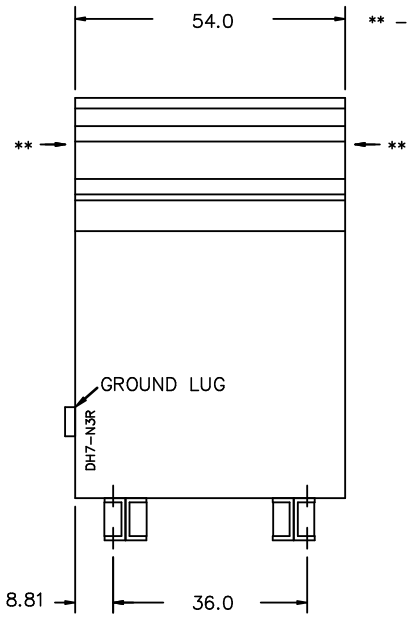

SIDE VIEW

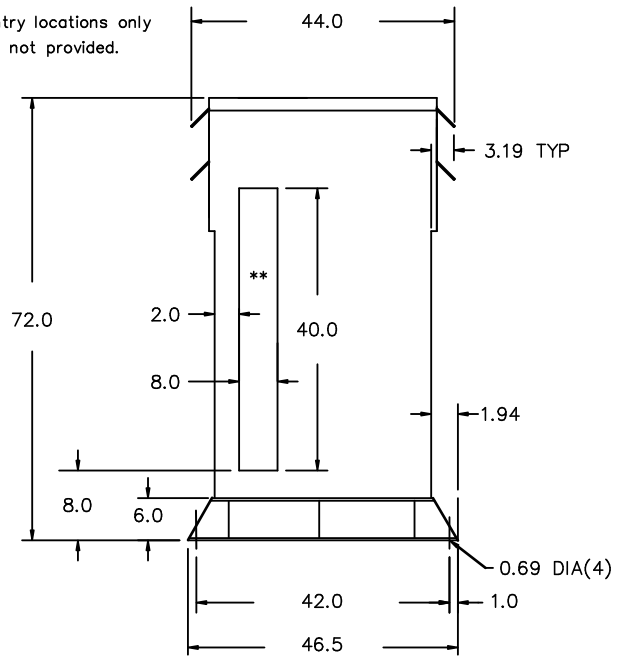

All Dimensions in inches

ENCLOSURE COLOR : ANSI 61 GREY – OUTDOOR

HV TERMINAL DETAIL

MECHANICAL TYPE LUGS INCLUDED
SUITABLE FOR 250MCM–6 CU/AL
CONDUCTORS
1 CONDUCTOR PER PHASE

LV TERMINAL DETAIL

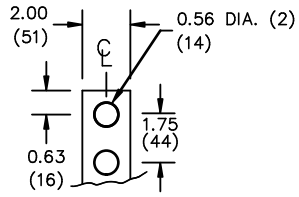

MATERIAL: 3/8" (9) THICK CU.

CUSTOMER NOTES:
- HV TERMINATED AT TOP FRONT
- LV TERMINATED AT BOTTOM FRONT

THIS DRAWING CONTAINS STRICTLY CONFIDENTIAL INFORMATION BELONGING TO HAMMOND POWER SOLUTIONS AND MUST NOT BE DISTRIBUTED OUTSIDE AUTHORIZED PARTIES.

hammond POWER SOLUTIONS

TITLE: 3PH DISTRIBUTION TRANSFORMER

NO.	DATE	BY	REVISION
2	21/07/16	PP	EDB UPDATE
1	20/03/17	PP	SEISMIC UPDATE

DES: MABDELAT
DATE: 19/02/19
SCALE: NTS

SHEET 2 OF 3

EDB MG3A1000SKSCHCO

2.0 Hpd 2026/07/24 08:08

ENCLOSURE BOTTOM VIEW

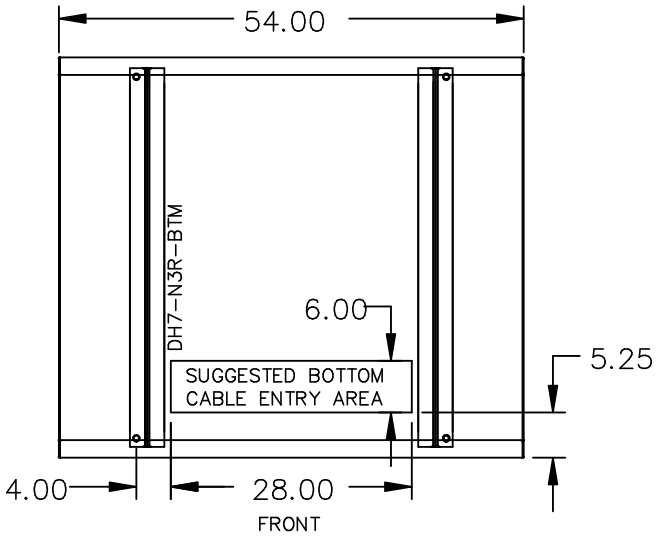

NOTE:
WHEN BOTTOM CABLE ENTRY IS OPTED, THE SPACE USED FOR CONDUITS IN THE FRONT OF THE TRANSFORMER SHOULD NOT OBSTRUCT MORE THAN 50% OF THE FRONT AIR INTAKE AREA DEFINED BETWEEN THE BOTTOM PLATE AND THE SUPPORTING LEGS.
SEE MANUAL FOR ADDITIONAL INFORMATION

hammond POWER SOLUTIONS

TITLE: 3PH DISTRIBUTION TRANSFORMER ENCLOSURE BOTTOM VIEW

NO.	DATE	BY	REVISION	
2	21/07/16	PP	EDB UPDATE	DES: MABDELAT
1	20/03/17	PP	SEISMIC UPDATE	DATE: 19/02/19
				SCALE: NTS

SHEET 3 OF 3

EDB MG3A1000SKSCHCO

THIS DRAWING CONTAINS STRICTLY CONFIDENTIAL INFORMATION BELONGING TO HAMMOND POWER SOLUTIONS AND MUST NOT BE DISTRIBUTED OUTSIDE AUTHORIZED PARTIES.