hammond POWER SOLUTIONS

# Distribution Transformer
# Transformateur de Distribution

Hyderabad, IN | Guelph, ONT Compton, CA | Baraboo, WI Monterrey, MX

Part No. MG3A0150SKSCGC0

LR 3902

DISTRIBUTION TRANSFORMER 56Y1 E147879 LISTED

8 03423 13453 2

| | | | |
|---|---|---|---|
| Cust. Ref. / Ref. du Client | | Serial No. / No. de Serie | |
| Phase | 3 | HV/HT | 4160V 20.8 A |
| Type | K | BIL | 30 kV |
| Cooling / Refroidissement | ANN | Term / Bornes | H1 H2 H3 |
| kVA | 150 | LV/BT | 480Y/277V 180 A |
| Temp. Rise / Echauffement | 130 °C | BIL | 10 kV |
| Temp Class / Classe Temp | 200 °C | Term / Bornes | X0 X1 X2 X3 |
| Winding / Enroulement | CU | Energy Regulations | DOE 10 CFR PART 431:2016 |
| Frequency / Frequence Hz | 60 | Reglements de Energetique | CEE ACT SOR/2011-182 |
| Impedance % @ 150 °C | 3.4 | | |
| Encl. Type/Category / Type ou categorie de boîtier | 3R C | ALSO VERIFIED IN ACCORDANCE TO ENERGY STANDARD C802.2-12 BY UNDERWRITERS LABORATORIES INC. 3VJ6 | |
| Weight / Poids lbs | 1200 | | |

| VOLTS | CURRENT COURANT | % RATED VOLTAGE % TENSION NOMINALE | CONNECTION EACH PHASE CONNEXION PAR PHASE |
|---|---|---|---|
| 4368 | 19.8 | 105 | 1-2 |
| 4264 | 20.3 | 102.5 | 2-3 |
| 4160 | 20.8 | 100 | 3-4 |
| 4056 | 21.4 | 97.5 | 4-5 |
| 3952 | 21.9 | 95 | 5-6 |

SPACINGS BETWEEN ANY VENTILATED ENCLOSURE PANEL AND ANY ADJACENT WALL SHALL BE A MINIMUM OF 5 INCHES EXCEPT WHEN WALL MOUNTED USING APPROVED WALL MOUNTI

SEISMIC QUALIFICATIONS, FLOOR MOUNT ONLY
QUALIFICATIONS SISIQUES, MONTAGE AU SOL SEULEMENT
OSP-0136-10 IBC 2012/ASCE 7-10
SDS<=2.0G Z/H=1 IP=1.5

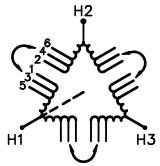


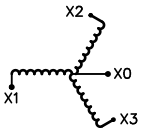


SEISMIC QUALIFICATIONS:
AS FLOOR MOUNT ONLY
IBC 2018/ASCE 7-16
SDS<=2.0g Z/h=1 Ip=1.5

00059ob

hammond POWER SOLUTIONS

TITLE: 3PH ??? TRANSFORMER NAMEPLATE INFORMATION

| NO. | DATE | BY | REVISION |
|---|---|---|---|
| 4 | 21/07/16 | PP | EDB UPDATE |
| 3 | 20/03/17 | PP | SEISMIC UPDATE |

SCALE: NTS | DATE: 16/03/16 | DES: RBHATIA

SHEET 1 OF 3

EDBMG3A0150SKSCGC0

4.0 httpd 2026/08/18 09:32

THIS DRAWING CONTAINS STRICTLY CONFIDENTIAL INFORMATION BELONGING TO HAMMOND POWER SOLUTIONS AND MUST NOT BE DISTRIBUTED OUTSIDE AUTHORIZED PARTIES.

FRONT VIEW

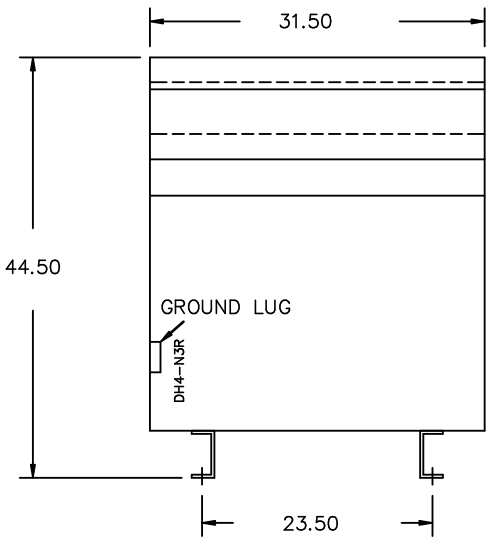


SIDE VIEW

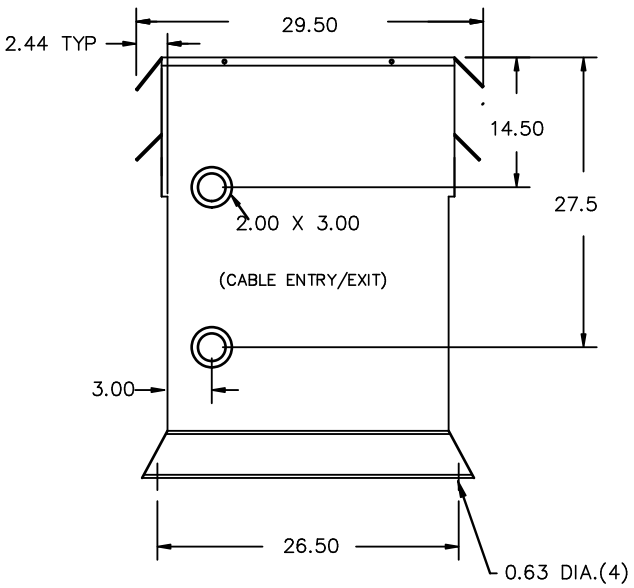


All Dimensions in inches

ENCLOSURE COLOR :ANSI 61 GREY – OUTDOOR

H.V.1. TERMINAL DETAIL

MECHANICAL TYPE LUGS INCLUDED
SUITABLE FOR #14–2 CU/AL
CONDUCTORS
1 CONDUCTOR PER PHASE

L.V.1. TERMINAL DETAIL

MECHANICAL TYPE LUGS INCLUDED
SUITABLE FOR 350MCM–6 CU/AL
CONDUCTORS
1 CONDUCTOR PER PHASE

CUSTOMER NOTES:
- HV1 TERMINATED AT TOP FRONT
- LV1 TERMINATED AT BOTTOM FRONT

hammond POWER SOLUTIONS

TITLE: 3PH ??? TRANSFORMER

| NO. | DATE | BY | REVISION |
|---|---|---|---|
| 4 | 21/07/16 | PP | EDB UPDATE |
| 3 | 20/03/17 | PP | SEISMIC UPDATE |

DES: RBHATIA
DATE: 16/03/16
SCALE: NTS

SHEET 2 OF 3

EDBMG3A0150KSCCCO

THIS DRAWING CONTAINS STRICTLY CONFIDENTIAL INFORMATION BELONGING TO HAMMOND POWER SOLUTIONS AND MUST NOT BE DISTRIBUTED OUTSIDE AUTHORIZED PARTIES.

ENCLOSURE BOTTOM VIEW

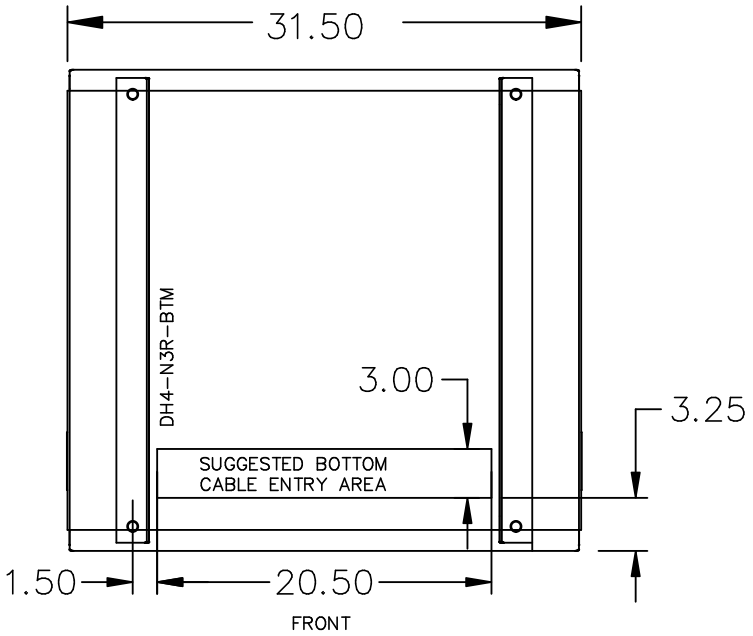


NOTE:
WHEN BOTTOM CABLE ENTRY IS OPTED, THE SPACE USED FOR CONDUITS IN THE FRONT OF THE TRANSFORMER SHOULD NOT OBSTRUCT MORE THAN 50% OF THE FRONT AIR INTAKE AREA DEFINED BETWEEN THE BOTTOM PLATE AND THE SUPPORTING LEGS.
SEE MANUAL FOR ADDITIONAL INFORMATION

hammond POWER SOLUTIONS

TITLE: 3PH ??? TRANSFORMER
ENCLOSURE BOTTOM VIEW

| NO. | DATE | BY | REVISION |
|---|---|---|---|
| 4 | 21/07/16 | PP | EDB UPDATE |
| 3 | 20/03/17 | PP | SEISMIC UPDATE |

DES: RBHATIA
DATE: 16/03/16
SCALE: NTS

SHEET 3 OF 3

EDBMG3A0150KSCCCO

THIS DRAWING CONTAINS STRICTLY CONFIDENTIAL INFORMATION BELONGING TO HAMMOND POWER SOLUTIONS AND MUST NOT BE DISTRIBUTED OUTSIDE AUTHORIZED PARTIES.