hammond POWER SOLUTIONS

HPS Fortress™ C

Dry Type Encapsulated Transformer
Transformateur de Type Sec Encapsulé

LR3902

LISTED

GENERAL PURPOSE TRANSFORMER
252L
E50394

Guelph, ONT
Compton, CA

Baraboo, WI
Monterrey, MX

Part No. FC2A0030PK

Cust. Ref. / Ref. du Client		Serial No. / No. de Serie	
Phase	3	HV/HT	600V 28.9A
Type	QT	BIL	10 kV
Cooling / Refroidissement	ANC	Term / Bornes	H1 H2 H3
kVA	30	LV/BT	480Y/277V 36.1A
Temp. Rise / Echauffement	135°C	BIL	10 kV
Temp Class / Classe Temp	220°C	Term / Bornes	X0 X1 X2 X3
Winding / Enroulement	AL		
Frequency / Frequence Hz	60		
Impedance % @ 155 °C	1.7		
Encl Type / Type De Coffrage	4		
Weight / Poids lbs/kg	495/225		

VOLTS	CURRENT / COURANT	% RATED VOLTAGE / % TENSION NOMINALE	CONNECTION EACH PHASE / CONNEXION PAR PHASE
630	27.5	105	1
615	28.2	102.5	2
600	28.9	100	3
585	29.6	97.5	4
570	30.4	95	5
555	31.2	92.5	6
540	32.1	90	7

SPACINGS BETWEEN ANY VENTILATED ENCLOSURE PANEL AND ANY ADJACENT WALL SHALL BE A MINIMUM OF 3 INCHES
ELECTROSTATIC SHIELD

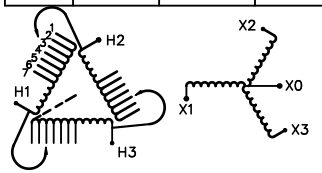

d0002006dfc

hammond POWER SOLUTIONS

TITLE: 3PH DISTRIBUTION TRANSFORMER
NAMEPLATE INFORMATION

NO.	DATE	BY	REVISION

DES: RHARISH
DATE: 24/04/11
SCALE: NTS

SHEET 1 OF 2

FDBFC2A0030PK

0.0 httpd 2026/07/24 03:22

THIS DRAWING CONTAINS STRICTLY CONFIDENTIAL INFORMATION BELONGING TO HAMMOND POWER SOLUTIONS AND MUST NOT BE DISTRIBUTED OUTSIDE AUTHORIZED PARTIES.

FRONT VIEW

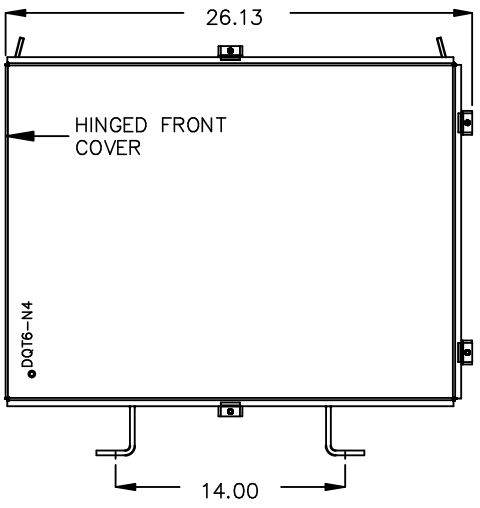

SIDE VIEW

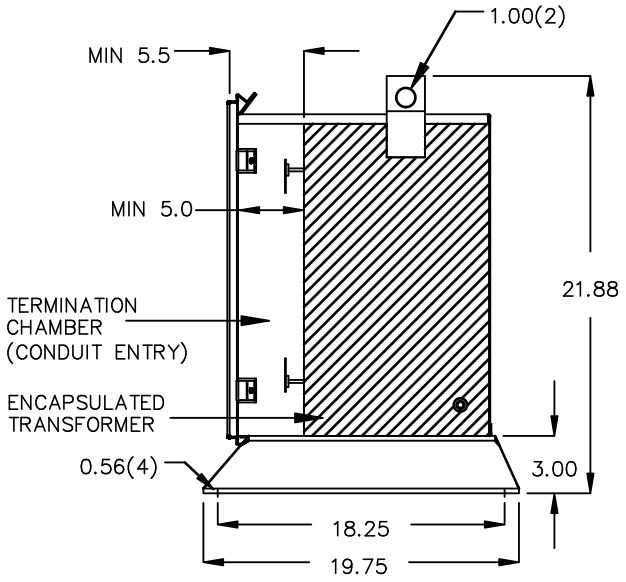

All Dimensions in inches

ENCLOSURE COLOR : ANSI 61 GREY – OUTDOOR

HV TERMINAL DETAIL

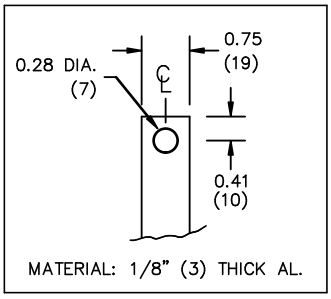

LV TERMINAL DETAIL

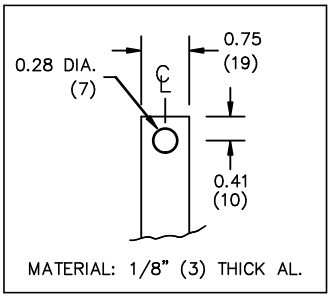

CUSTOMER NOTES:
- HV TERMINATED AT BOTTOM FRONT
- LV TERMINATED AT TOP FRONT

hammond POWER SOLUTIONS

TITLE:	3PH DISTRIBUTION TRANSFORMER				
				DES:	RHARISH
				DATE:	24/04/11
NO.	DATE	BY	REVISION	SCALE:	NTS

SHEET 2 OF 2

EDBFC2A0030PK

THIS DRAWING CONTAINS STRICTLY CONFIDENTIAL INFORMATION BELONGING TO HAMMOND POWER SOLUTIONS AND MUST NOT BE DISTRIBUTED OUTSIDE AUTHORIZED PARTIES.