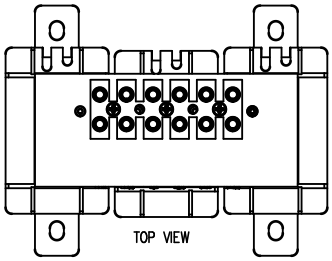

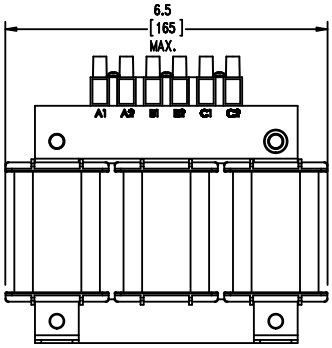

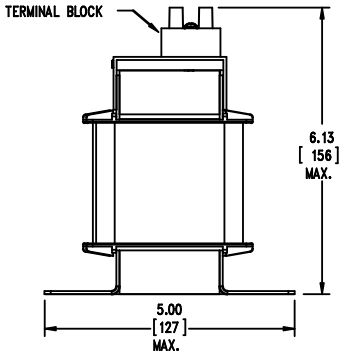

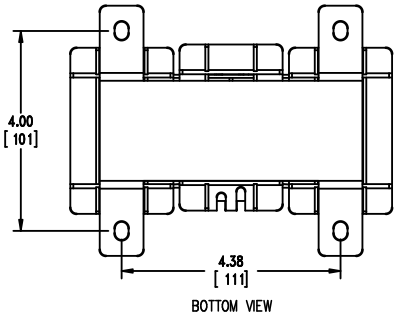

TERMINAL BLOCK
SUITABLE FOR
#13 TO #10 AWG
CONDUCTORS
QTY. 1 PER PHASE

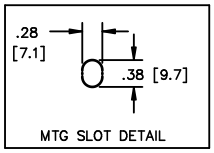

hammond POWER SOLUTIONS	TOLERANCES MOUNTING CENTERS = +/- .06" MOUNTING HOLE SIZE = +/- .005"	THIS DRAWING CONTAINS PROPRIETARY INFORMATION BELONGING TO HAMMOND POWER SOLUTIONS INC., AND IS NOT FOR GENERAL DISTRIBUTION	All Dimensions in Inches mm in Parenthesis	REACTOR

hammond
POWER SOLUTIONS

HPS CENTURION R 3PH DRY TYPE REACTOR

CRX15D6NC

1.35MH 50 HZ 15.6 AMPS
0.6 KV CLASS TEMP CLASS: 130 TYPE JR-1
AMBIENT: 50°C

NOTES:

hammond
POWER SOLUTIONS

TITLE: 3 PHASE LINE REACTOR

NO.	DATE	BY	REVISION

DES: PBAKER
DATE: 24/05/21
SCALE: NTS

SHEET 1 OF 1

EDB CRX15D6NC

THIS DRAWING CONTAINS STRICKLY CONFIDENTIAL INFORMATION BELONGING TO HAMMOND POWER SOLUTIONS AND MUST NOT BE DISTRIBUTED OUTSIDE AUTHORIZED PARTIES.

0.1 httpd 2026/05/23 12:40