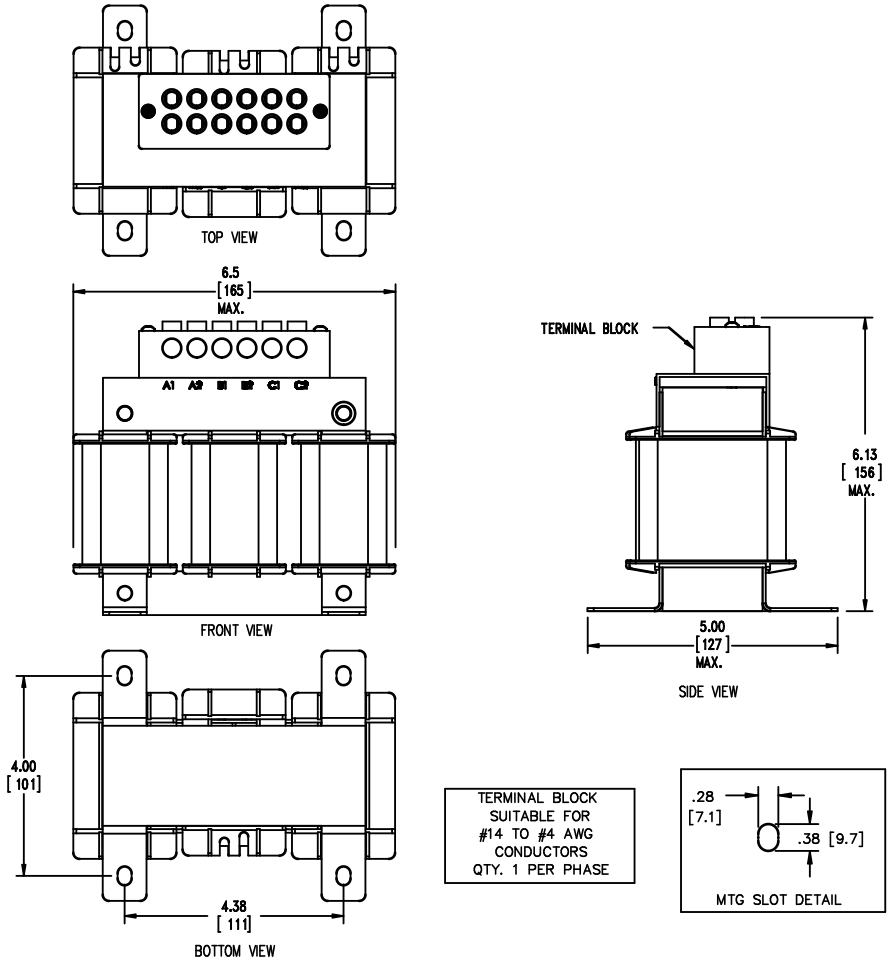

hammond POWER SOLUTIONS	TOLERANCES MOUNTING CENTERS = +/- .06" MOUNTING HOLE SIZE = +/- .005"	THIS DRAWING CONTAINS PROPRIETARY INFORMATION BELONGING TO HAMMOND POWER SOLUTIONS INC., AND IS NOT FOR GENERAL DISTRIBUTION	All Dimensions in Inches mm in Parenthesis	REACTOR

hammond POWER SOLUTIONS

HPS CENTURION R
3PH DRY TYPE
REACTOR

CRX0023NC

0.91MH 50 HZ 23 AMPS

0.6 KV CLASS TEMP CLASS: 130 TYPE JR-1

AMBIENT: 50°C

NOTES:

hammond POWER SOLUTIONS

TITLE: 3 PHASE LINE REACTOR

NO.	DATE	BY	REVISION

DES: PBAKER
DATE: 24/05/21
SCALE: NTS

SHEET 1 OF 1

EDBCRX0023NC

THIS DRAWING CONTAINS STRICKLY CONFIDENTIAL INFORMATION BELONGING TO HAMMOND POWER SOLUTIONS AND MUST NOT BE DISTRIBUTED OUTSIDE AUTHORIZED PARTIES.

0.1 httpd 2026/04/05 05:55